BEHAVIORAL HEALTH

Prime Healthcare

BEHAVIORAL HEALTH – Lobby

Monarch Lounge Chair

DESCRIPTION

A No Wipe Out

B Security Panel on Bottom painted Black
Fastened with Tamper Resistant Screws

C Tamper Proof Glides

D Additional Weight Added not to Exceed 100 lbs.

Prime Healthcare

BEHAVIORAL HEALTH – Lobby

Monarch Lounge Settee

DESCRIPTION

A No Wipe Out

B Security Panel on Bottom painted Black
Fastened with Tamper Resistant Screws

C Tamper Proof Glides

D Additional Weight Added not to Exceed 100 lbs.

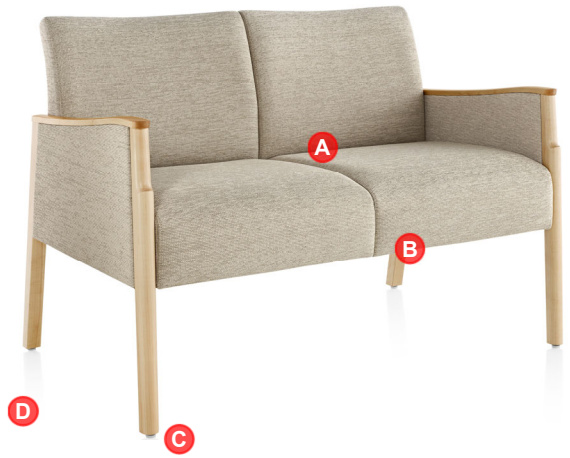

Prime Healthcare

BEHAVIORAL HEALTH – Lobby

Monarch Lounge Sofa

DESCRIPTION

A No Wipe Out

B Security Panel on Bottom painted Black
Fastened with Tamper Resistant Screws

C Tamper Proof Glides

D Additional Weight Added not to Exceed 100 lbs.

Prime Healthcare

BEHAVIORAL HEALTH – Lobby

Monarch Lounge Special Details

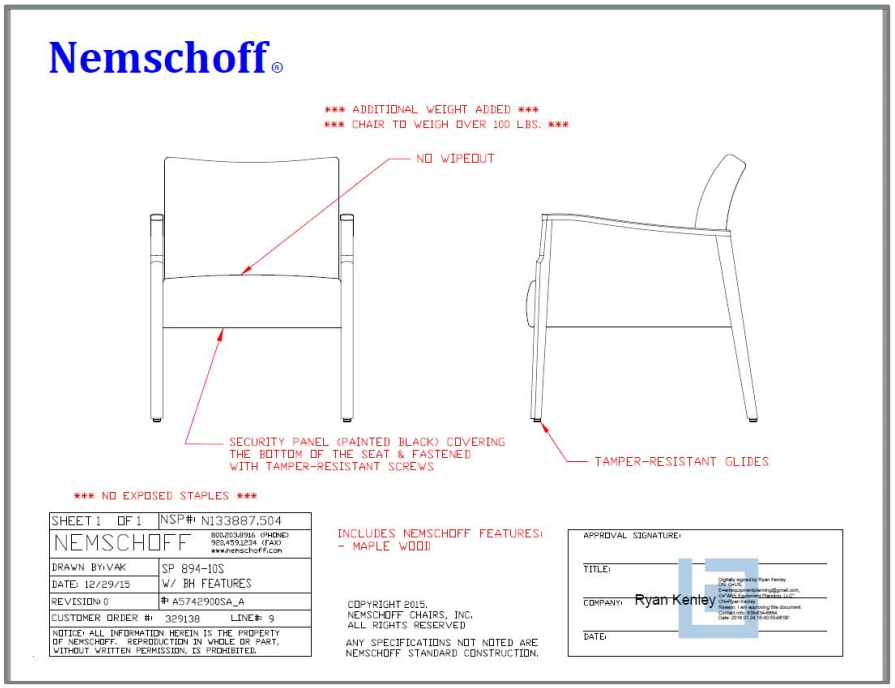

Prime Healthcare

BEHAVIORAL HEALTH – Lobby

Horizon Plus

DESCRIPTION

A Open Arms

B Large Opening between Seat and Back to prevent concealment

C Tamper Proof Glides

D Security Panel on Bottom Painted Black Fastened with Tamper Resistant Screws

E Added Weight not to Exceed 100lbs.

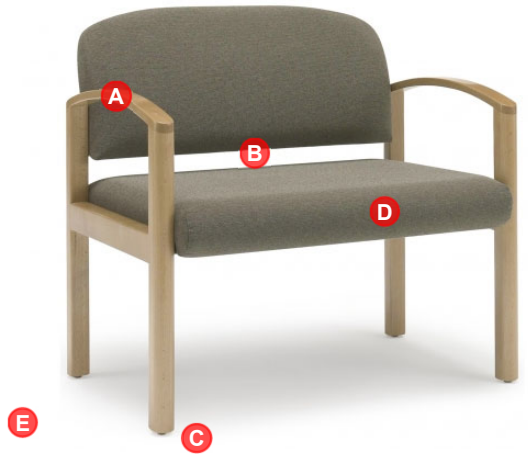

Prime Healthcare

BEHAVIORAL HEALTH – Lobby

Horizon Plus

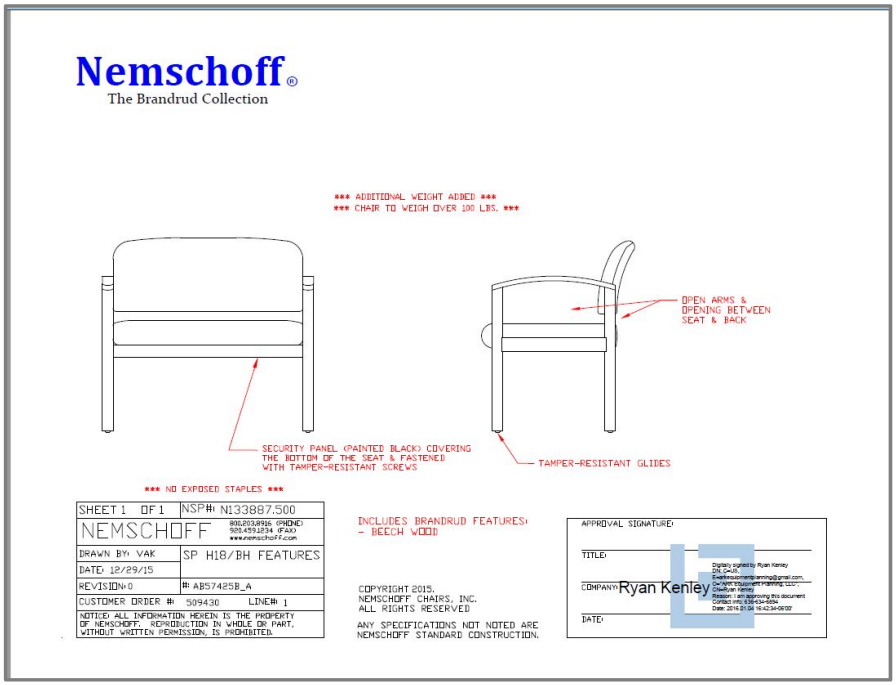

HermanMiller Nemschoff

Prime Healthcare

BEHAVIORAL HEALTH – Patient Room

Nightstand – 3 Shelves

DESCRIPTION

Laminate Case
Reinforced Shelves, fixed in place
Tamper Proof Fasteners
Replaceable Components
Vented Back Panel

Prime Healthcare

BEHAVIORAL HEALTH – Patient Room

Platform Bed

DESCRIPTION

Certified to Support up to 750 lbs.
Laminate Bed Frame
Optional Head Board
Optional Drawers or Shelves
Optional Floor Mount

HermanMiller Nemschoff

Prime Healthcare

BEHAVIORAL HEALTH – Dining Room

Princeton

DESCRIPTION

Solid Hardwood Frame
Mortise and Tenon Joinery
Replaceable Components
Wipe-out Design
Wood or Urethane Arm Caps
Square or Arcade Back
350 lb Weight Capacity