# DEPARTMENT OF DEFENSE (DOD)

## Joint Schedule Numbers (JSNs)

August 2023

# E0603

PHARMACY,SHELF UNIT,WALL MTD,9x48x72

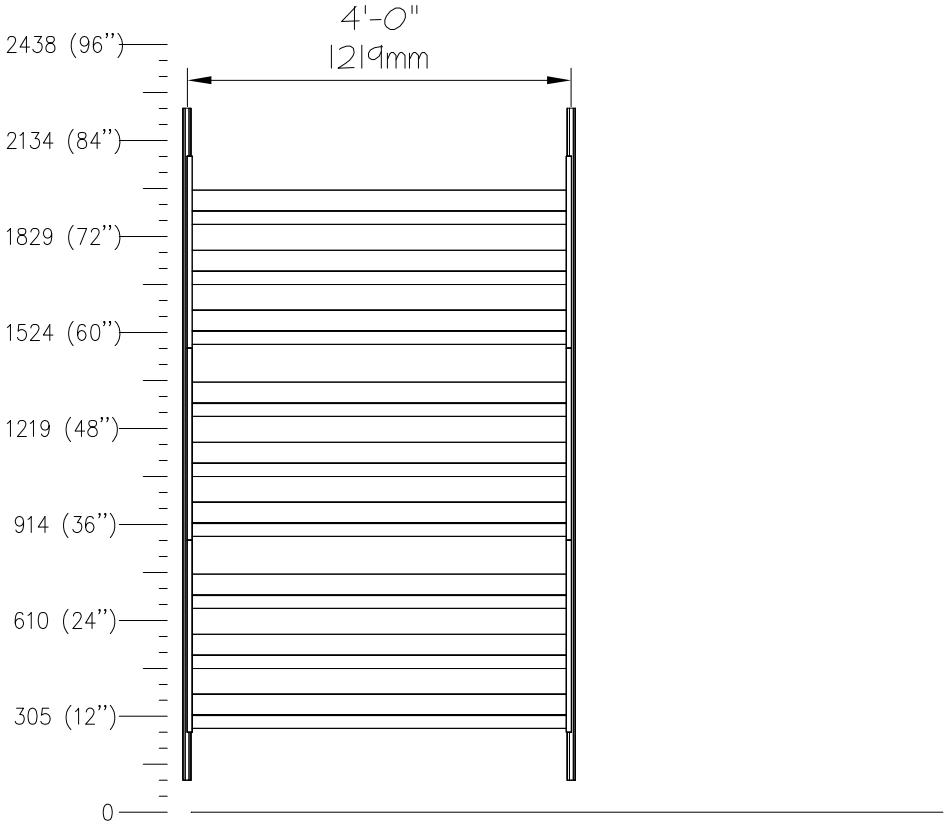


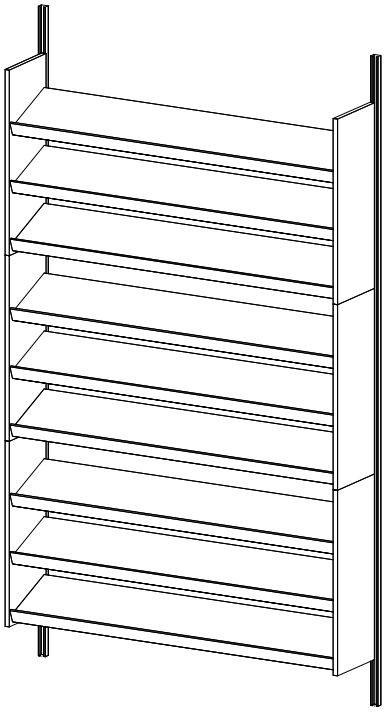

SCALE: 1/2"=1'-0"

| QTY | DESCRIPTION |
|---|---|
| 2 | Vertical Hanging Strips |
| 3 | 3 SHelf, Unit |

# E0606

PHARMACY,SHELF UNIT,WALL MTD,16x24x72

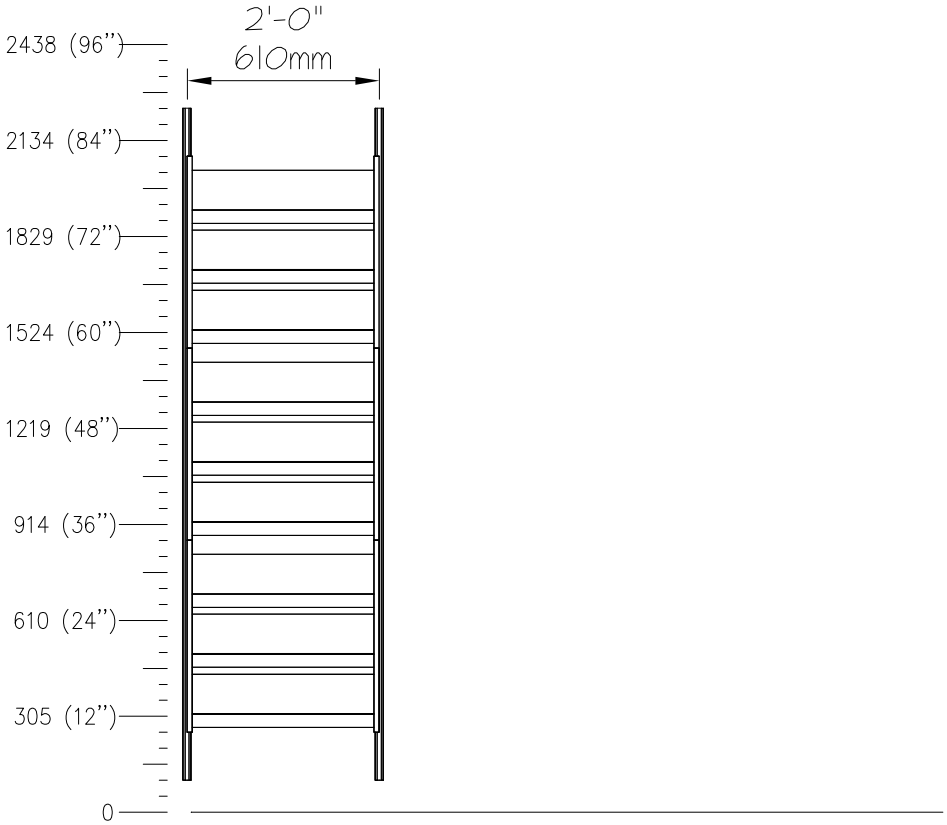


SCALE: 1/2"=1'-0"

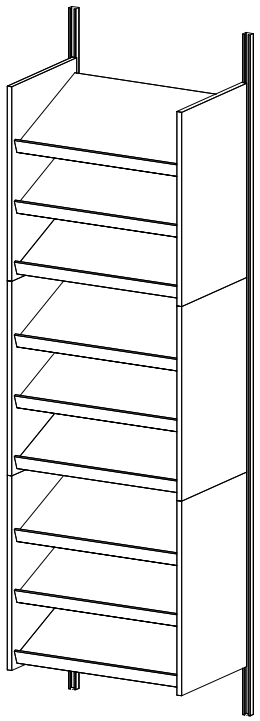

| QTY | DESCRIPTION |
|---|---|
| 2 | Vertical Hanging Strips |
| 3 | 3 Shelf, Unit |

# E0609

PHARMACY,SHELF UNIT,WALL MTD,16x30x72

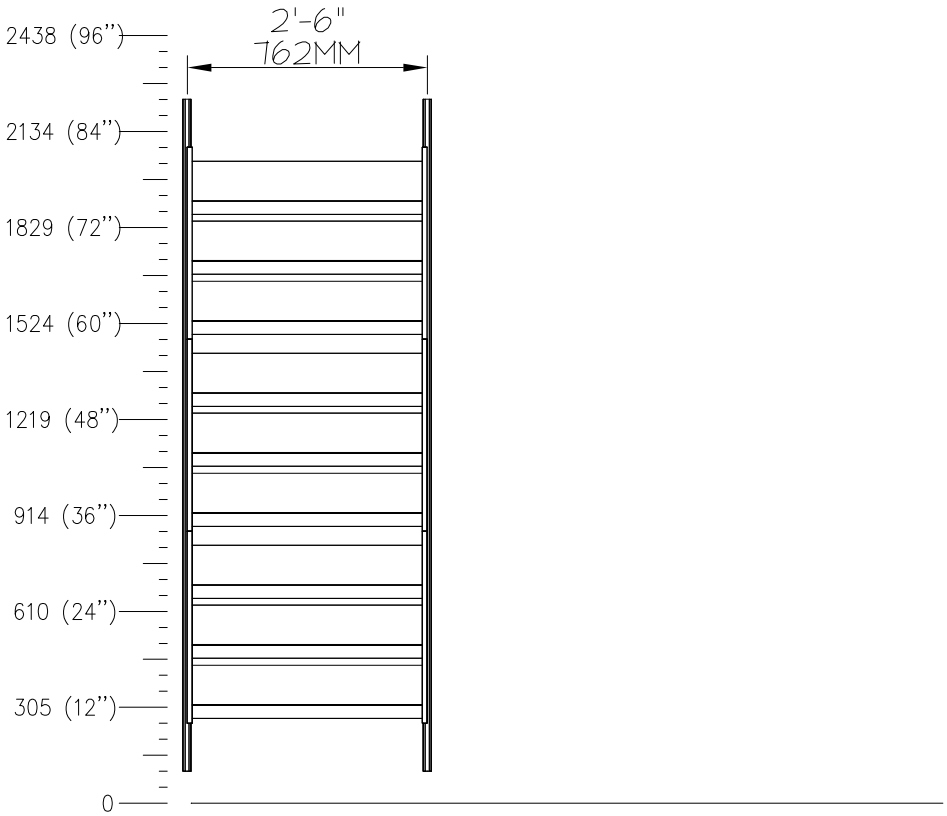


SCALE: 1/2"=1'-0"

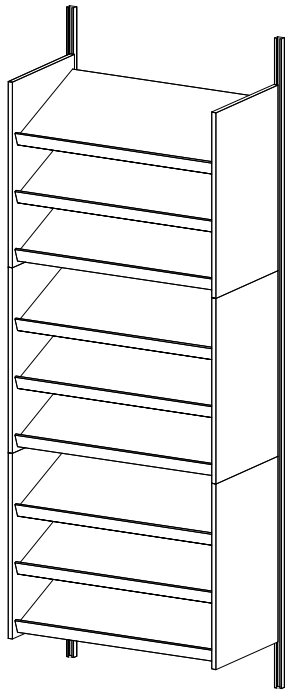

| QTY | DESCRIPTION |
|---|---|
| 2 | Vertical Hanging Strips |
| 3 | 3 Shelf, Unit |

# E0612

PHARMACY,SHELF UNIT,WALL MTD,16x48x72

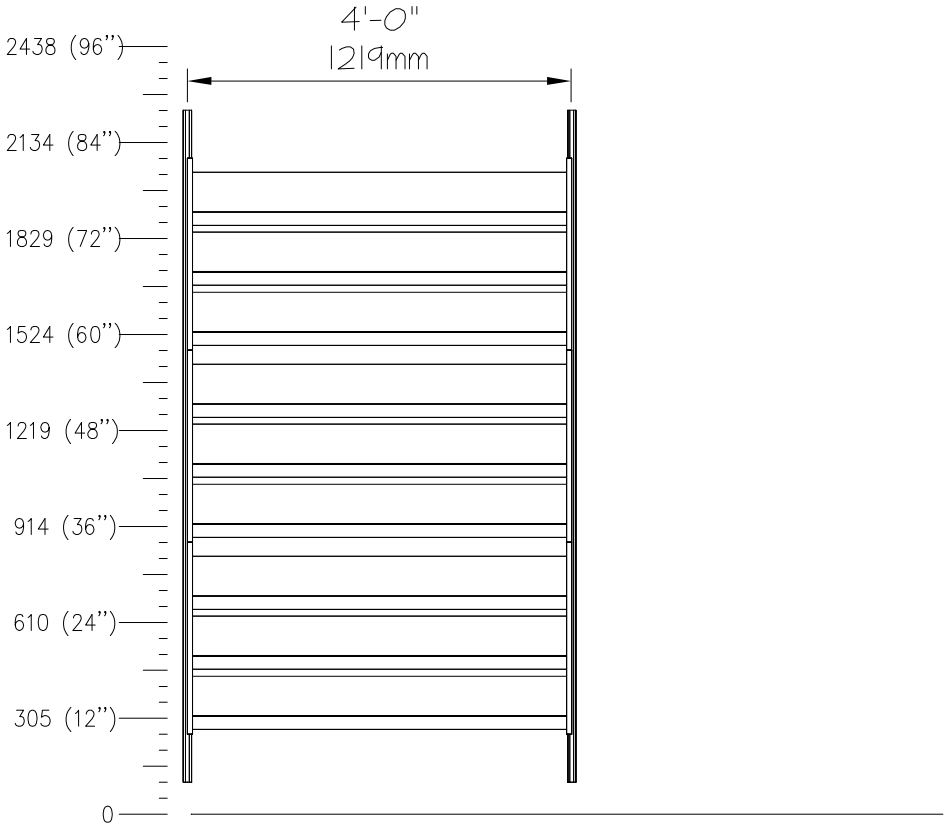


SCALE: 1/2"=1'-0"

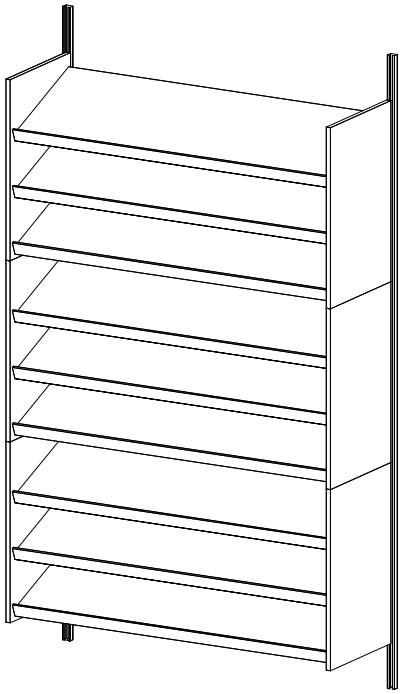

| QTY | DESCRIPTION |
|---|---|
| 2 | Vertical Hanging Strips |
| 3 | 3 Shelf, Unit |

# E0615

PHARMACY,SHELFS,WALL MTD13x48x74

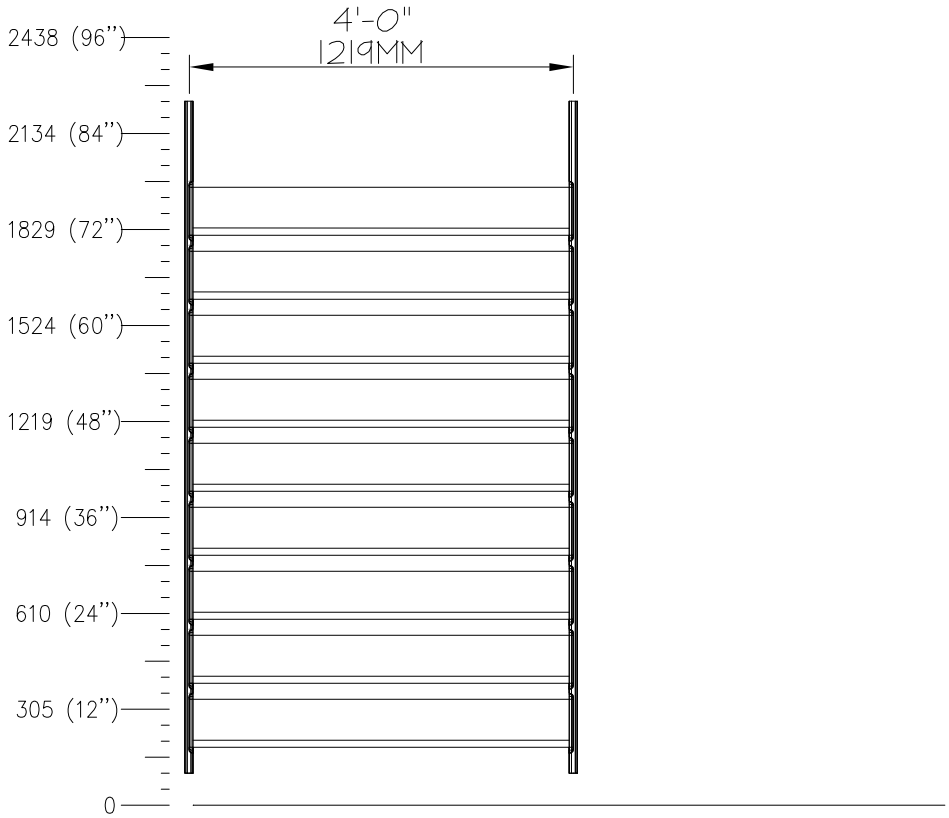


SCALE: 1/2"=1'-0"

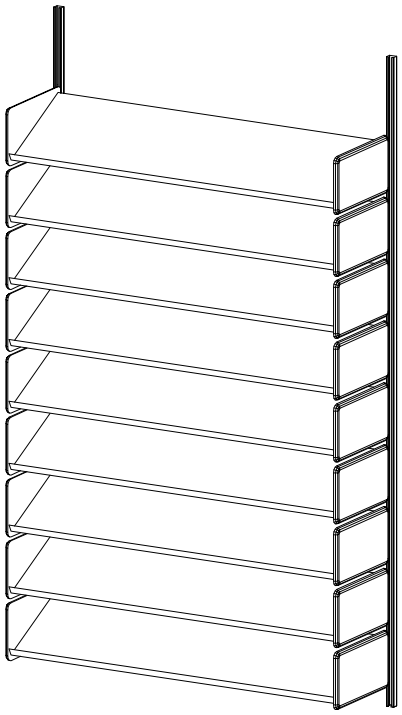

| QTY | DESCRIPTION |
|---|---|
| 2 | Vertical Hanging Strips |
| 9 | Storage or Display Shelf |

# E0618

PHARMACY,SHELFS,WALL MTD,16x48x76

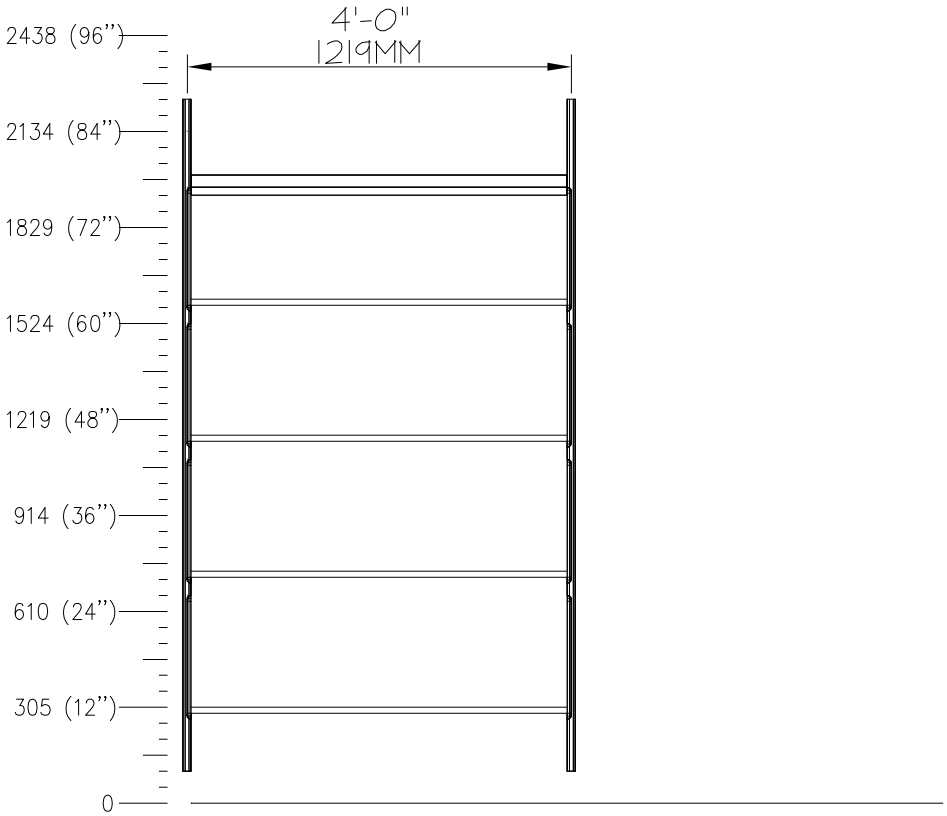


SCALE: 1/2"=1'-0"

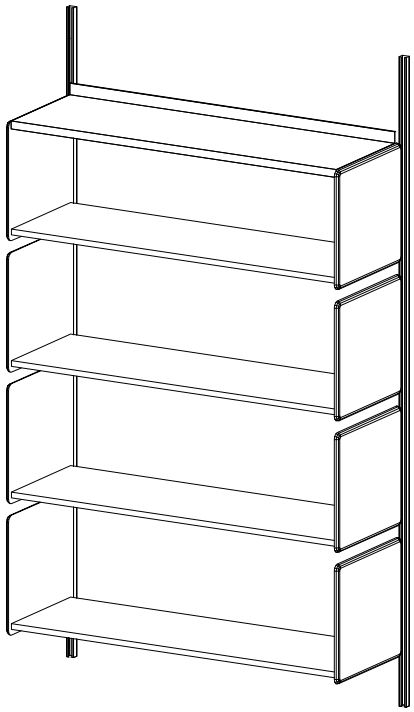

| QTY | DESCRIPTION |
|---|---|
| 2 | Vertical Hanging Strips |
| 4 | Extra Deep Shelf |

# E0624

PHARMACY,COUNTER & STORAGE,WALL MTD,48

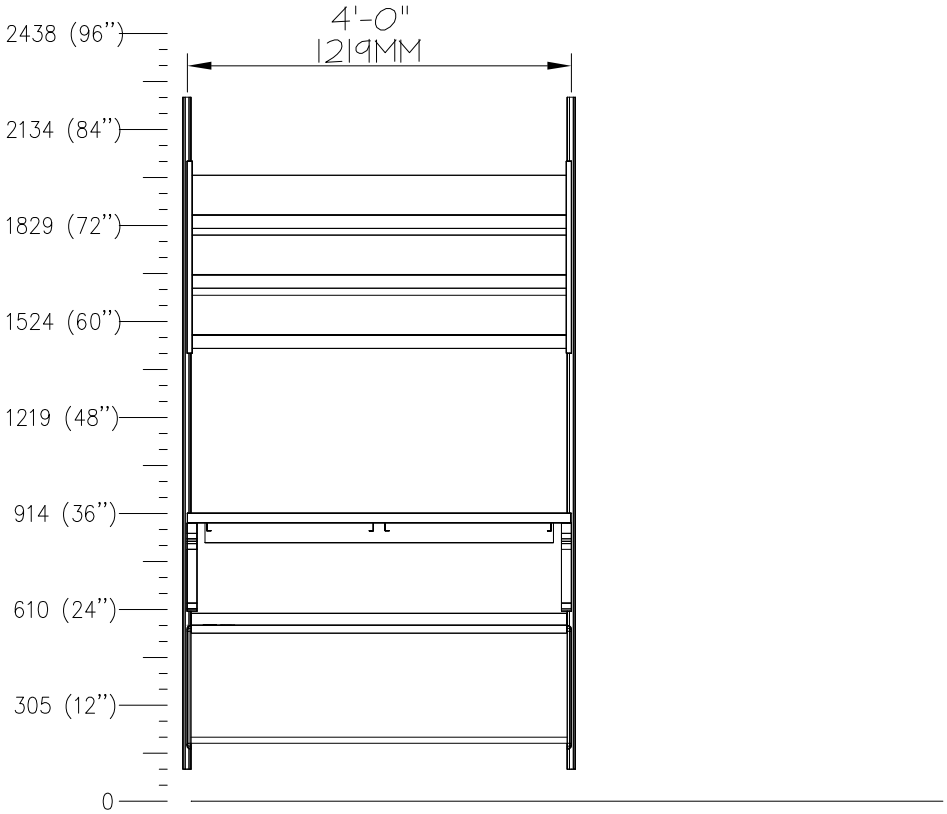


SCALE: 1/2"=1'-0"

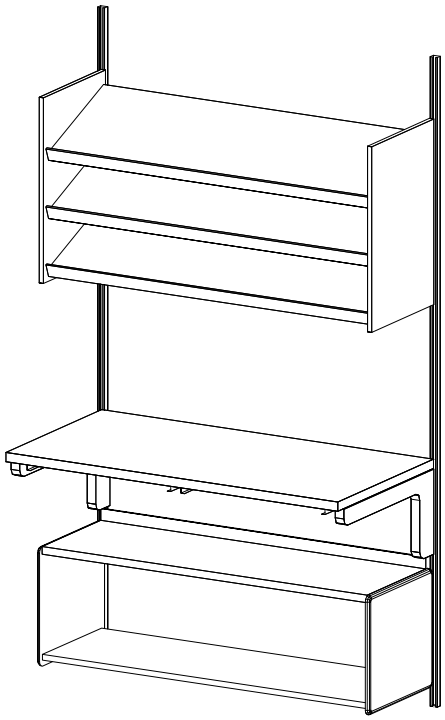

| QTY | DESCRIPTION |
|---|---|
| 2 | Vertical Hanging Strips |
| 1 | 3 Shelf, Unit |
| 1 | Cantilevered Work Surface |
| 2 | Extra Deep Shelf |

# E0627

## PHARMACY,COUNTER & STORAGE,WALL MTD,48

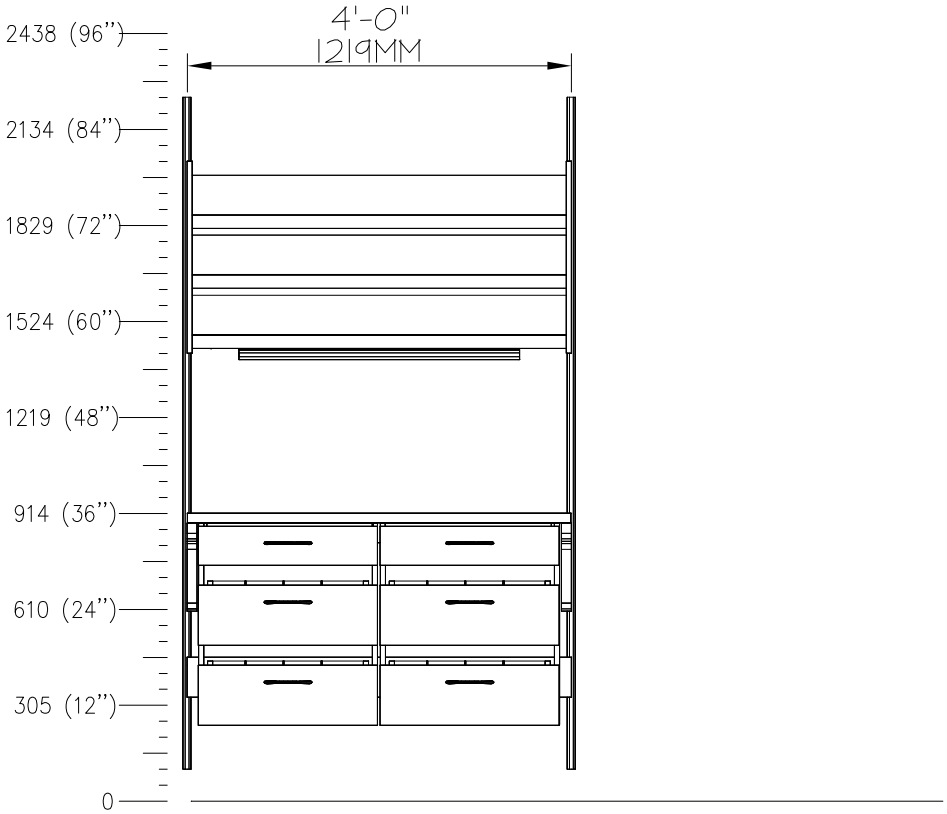


SCALE: 1/2"=1'-0"

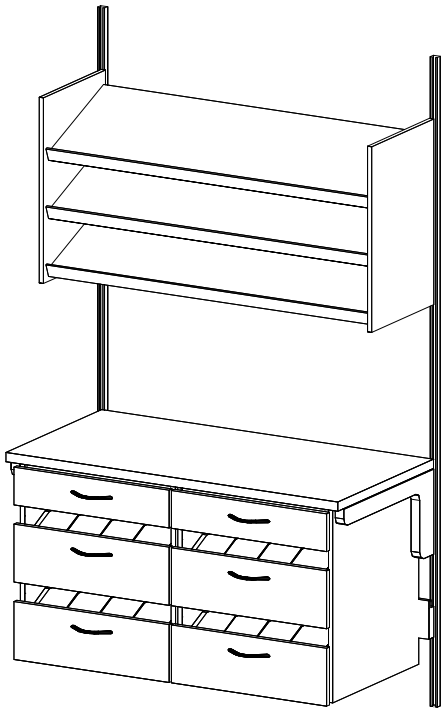

| QTY | DESCRIPTION |
|---|---|
| 2 | Vertical Hanging Strips |
| 1 | 3 Shelf, Unit |
| 1 | Cantilevered Work Surface |
| 2 | Storage Cabinet |
| 4 | Pull-Out Bottle Drawer |
| 2 | Storage Cabinet Drawer |

# E0630

PHARMACY,TABLE & STORAGE,WALL MTD,48

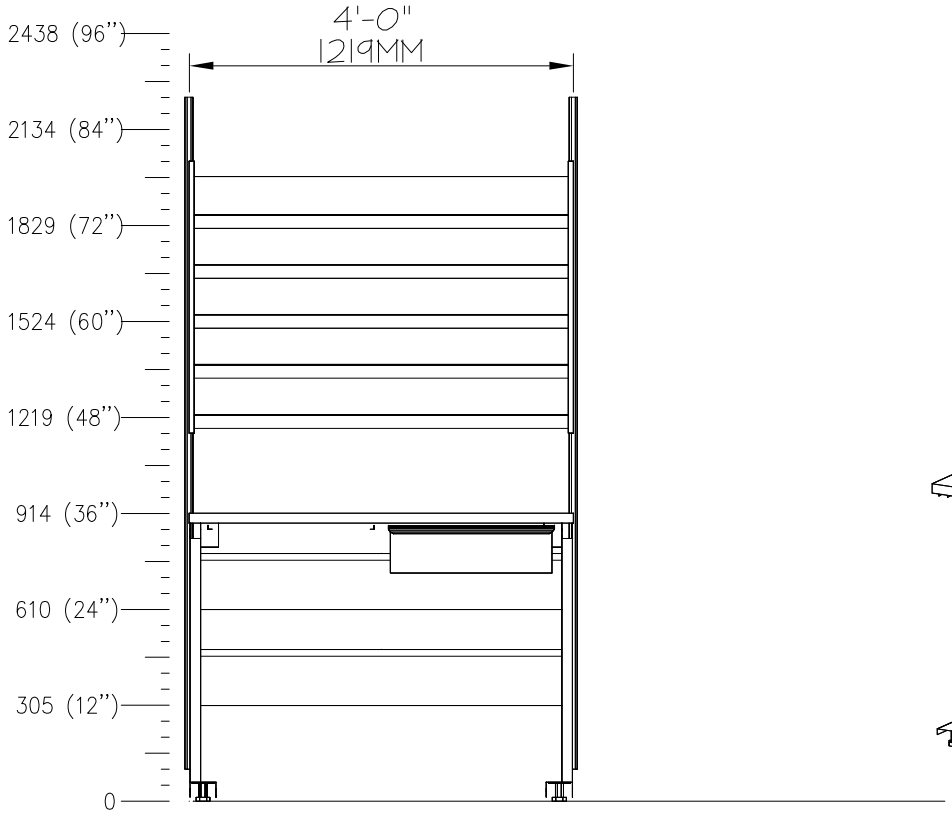


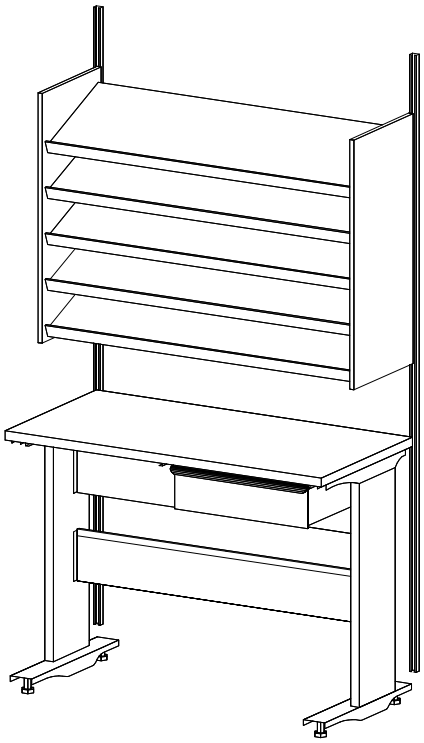

SCALE: 1/2"=1'-0"

| QTY | DESCRIPTION |
|---|---|
| 2 | Vertical Hanging Strips |
| 1 | 5 Shelf Unit |
| 1 | Freestanding Work Surface |
| 1 | Drawer, 6"H (152mm) |

# E0633

PHARMACY,SINK & STORAGE,WALL MTD,54

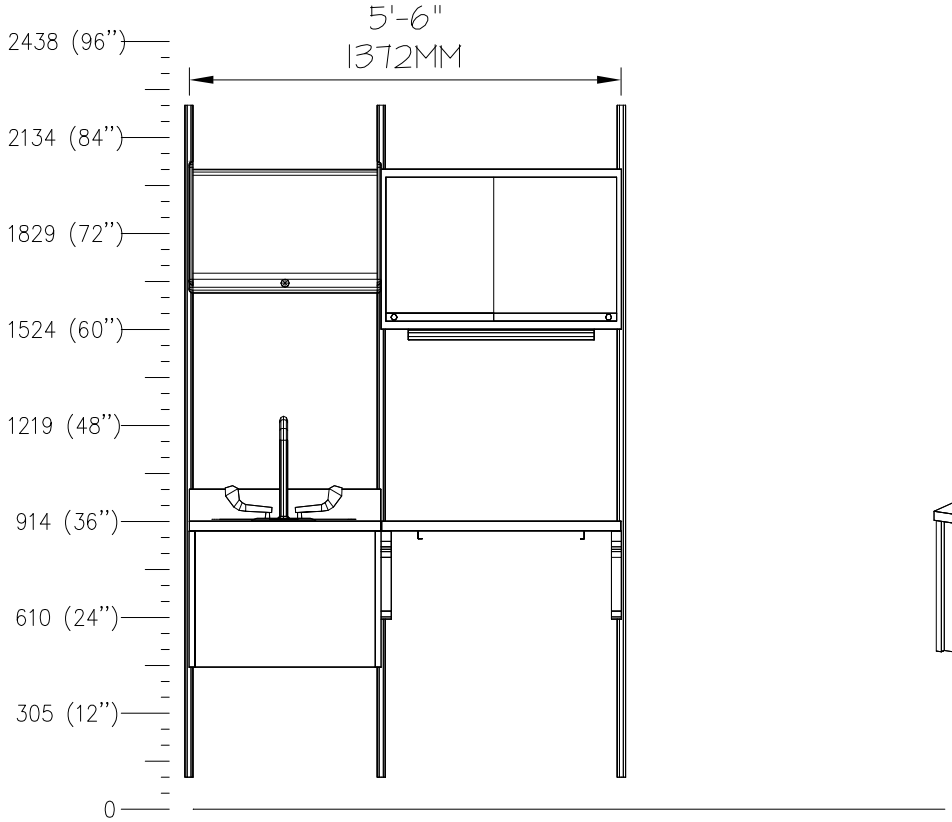


SCALE: 1/2"=1'-0"

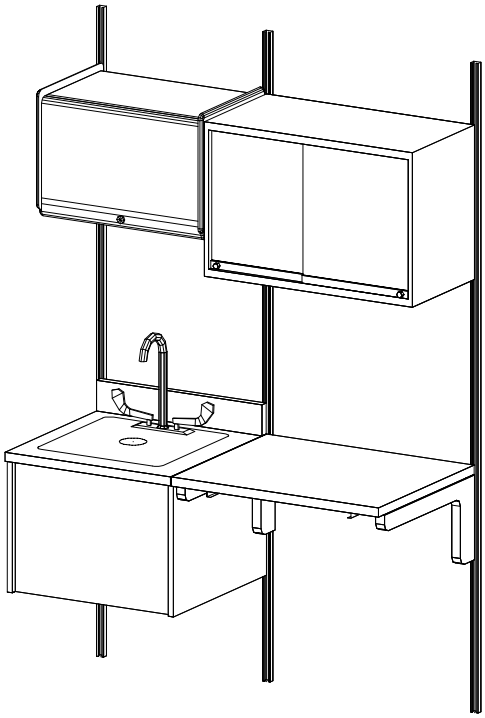

| QTY | DESCRIPTION |
|---|---|
| 3 | Vertical Hanging Strips |
| 1 | Lockable Flipper Unit |
| 1 | Cabinet With Doors |
| 1 | Light |
| 1 | Cantilevered Work Surface, Corain Top |
| 1 | Cantilevered Sink Adaptable Work Surface |
| 1 | Extra Deep Shelf |

# E0636

PHARMACY,COUNTER & STORAGE,WALL MTD,72

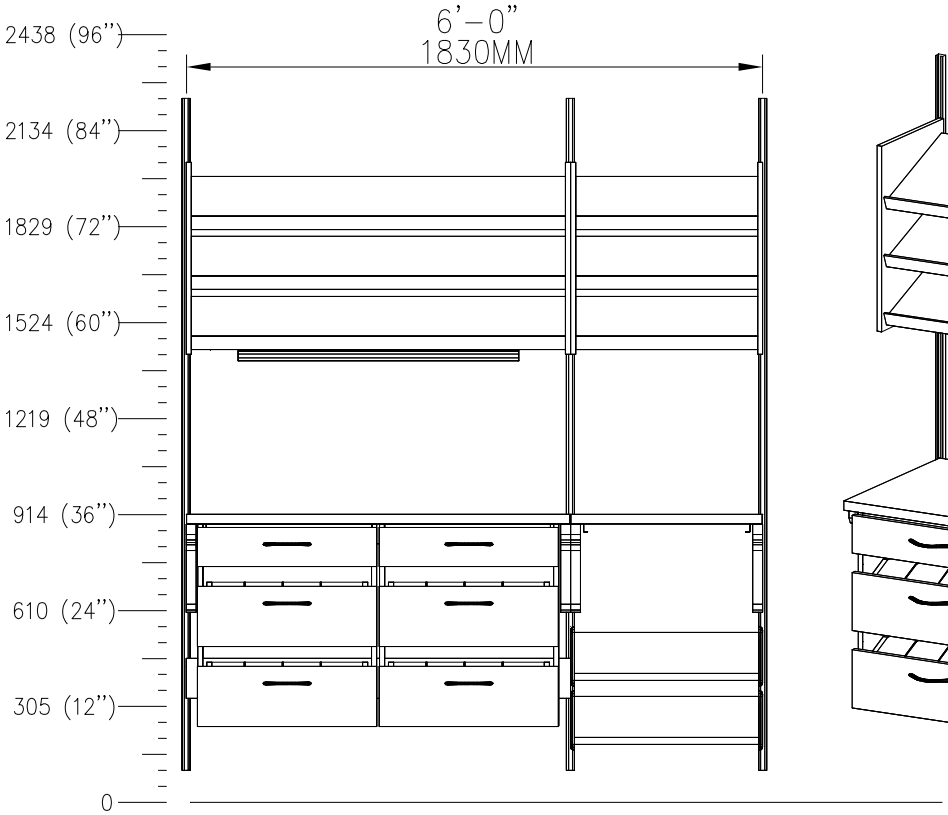


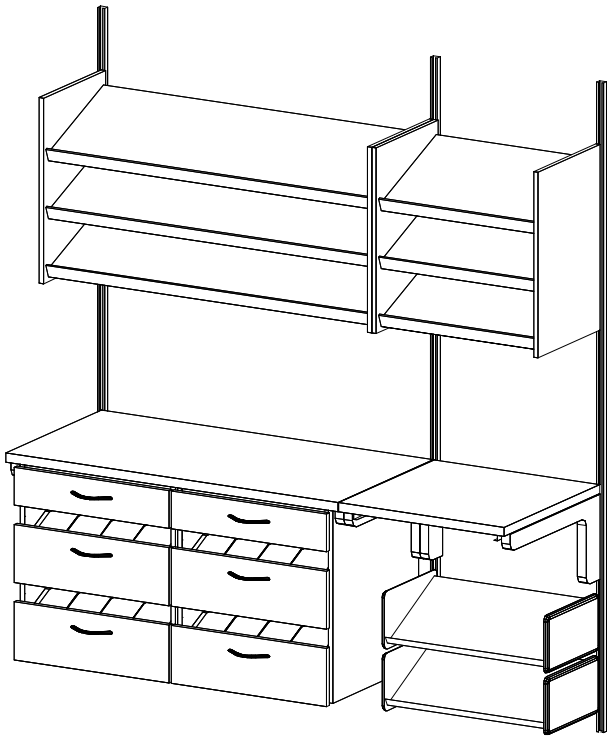

SCALE: 1/2"=1'-0"

| QTY | DESCRIPTION |
|---|---|
| 3 | Vertical Hanging Strips |
| 2 | 3 Shelf, Unit |
| 2 | Cantilevered Work Surface |
| 2 | Storage Cabinet |
| 4 | Pull-Out Bottle Drawer |
| 2 | Storage Cabinet Drawer |
| 2 | Shelf, Storage Display |
| 1 | Light |

# E0639

PHARMACY,COUNTER & STORAGE,WALL MTD,96

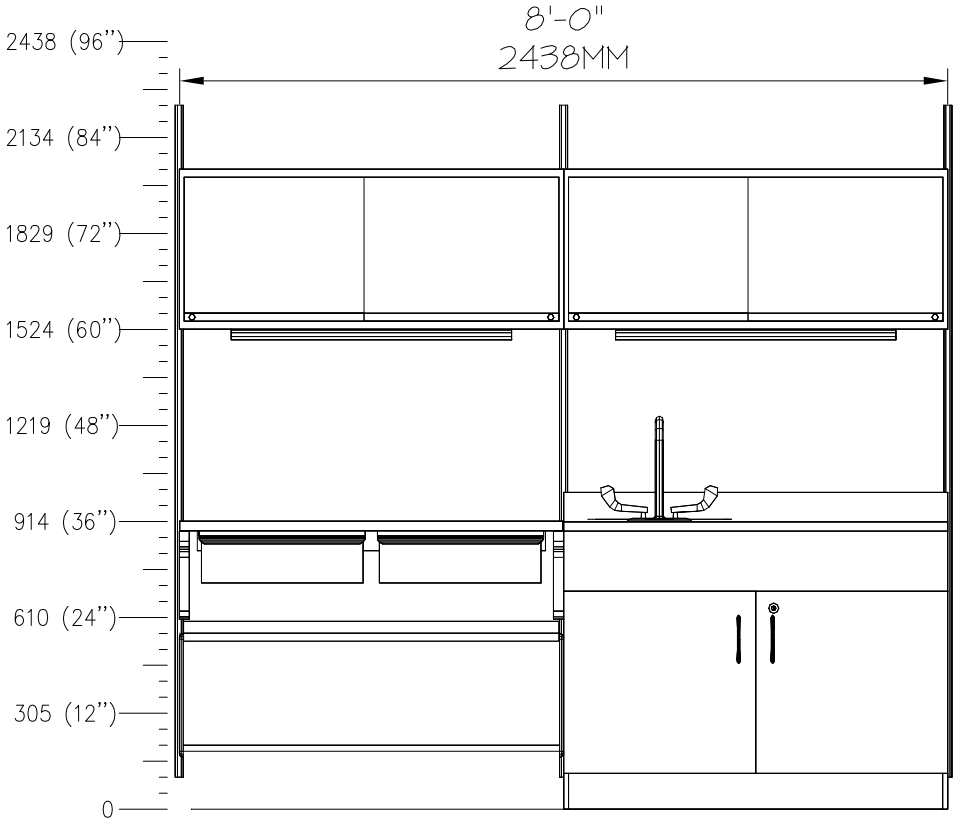


SCALE: 1/2"=1'-0"

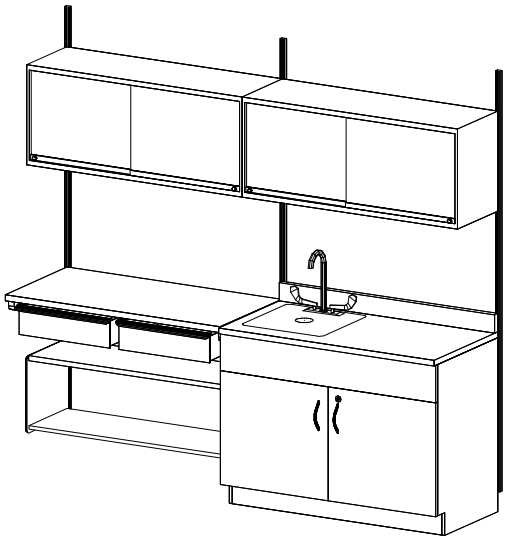

| QTY | DESCRIPTION |
|---|---|
| 3 | Vertical Hanging Strips |
| 2 | Cabinet With Doors |
| 2 | Light |
| 1 | Cantilevered Work Surface |
| 1 | Freestanding Sink Adaptable Cabinet W/Integral Backsplash With Corian Top |
| 2 | Extra Deep Shelf |
| 2 | Drawer, 6"H (152mm) |

# E0645

PHARMACY,PICKING STRAIGHT,WALL MTD,144

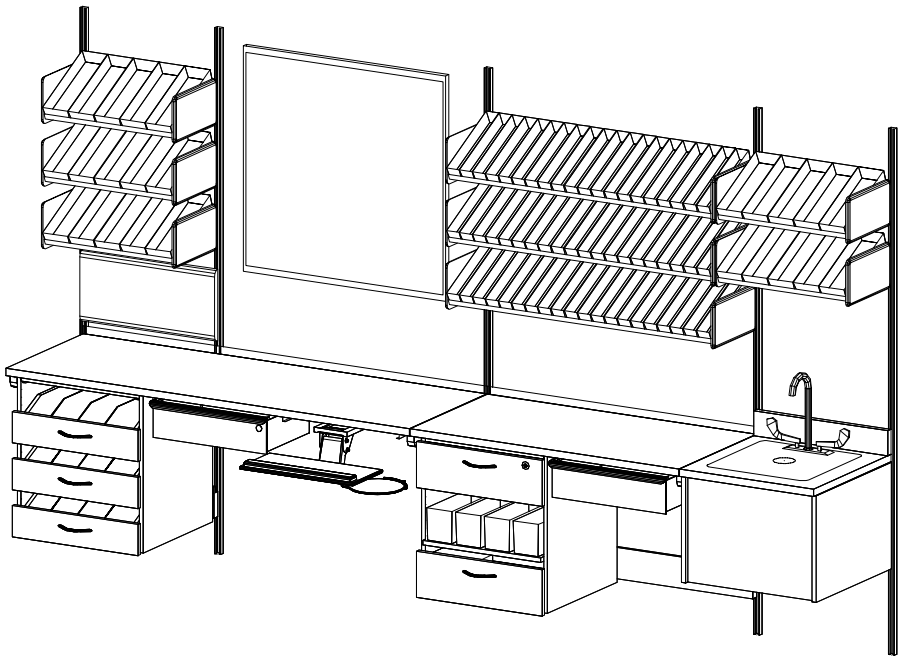

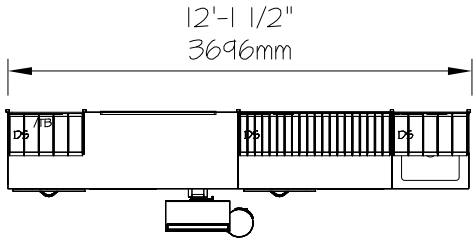


| QTY | DESCRIPTION |
|---|---|
| 5 | Vertical Hanging Strips |
| 8 | Shelf, Storage/Display |
| 60 | Bins, 2 1/4"W (57mm) x 2 3/16"H (57mm) |
| 25 | Bins, 4 9/16"W (114mm) x 2 3/16"H (57mm) |
| 4 | Bins, 4 9/16"W (114mm) x 5 3/16"H (133mm) |
| 1 | Tackboard |
| 2 | Light |
| 2 | Cantilevered Work Surface W/Backsplash |
| 1 | Cantilevered Sink Adaptable Work Surface W/Backsplash With Corian Top |
| 1 | Drawer, 6"H (152mm) |
| 1 | Drawer, 6"H (152mm) W/Lock |
| 1 | Adjustable Keyboard Tray |
| 2 | Storage Cabinet |
| 3 | Pull-Out Bottle Drawer |
| 2 | Storage Cabinet Drawer |
| 1 | Pull-Out Shelf |

# E0648

PHARMACY,PICKING U-SHAPE,FREE STD,72x144

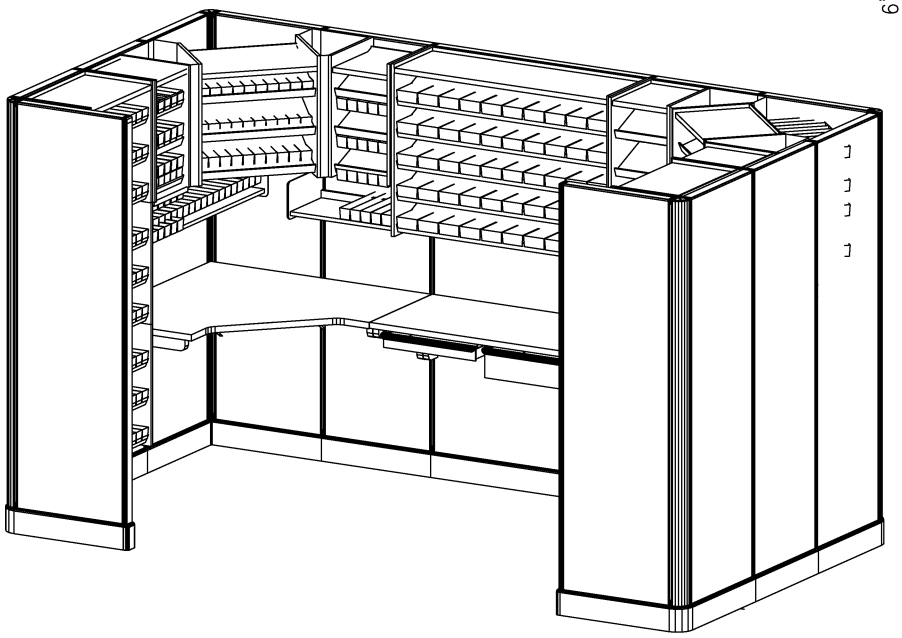

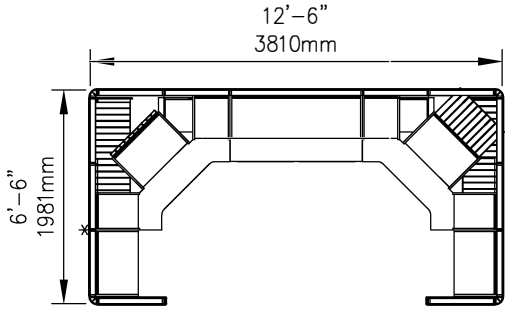


| QTY | DESCRIPTION |
|---|---|
| 12 | Solid Panel, 85"H (2159mm) x 24"W (610mm) |
| 1 | Solid Panel, 85"H (2159mm) x 48"W (1219mm) |
| 4 | Panel Connector, 2-Way Corner, 85"H (2159mm) |
| 8 | Panel-to-Panel Connector |
| 2 | Finished End Hardware |
| 2 | Cantilevered, Corner Work Surface, 48"W (1219mm) |
| 1 | Cantilevered, Work Surface, 48"W (1219mm) |
| 6 | 3 Shelf Unit, 24"W (610mm) |
| 1 | 5 Shelf Unit, 48"W (1219mm) |
| 2 | Shelf, 24"W (610MM) |
| 2 | Shelf, 48"W (1219mm) |
| 2 | Corner, 3 Shelf unit, 48"W (1219mm) |
| 1 | Drawer, 3"H (76mm) |
| 1 | Drawer, 6"H (152mm) |
| 50 | Bins, 4 9/16"W (114mm) x 2 3/16"H (57mm) |
| 380 | Bins, 2 1/4"W (57mm) x 2 3/16"H (57mm) |

# E0651

PHARMACY,PICKING U-SHAPE,FREE STD,72x144

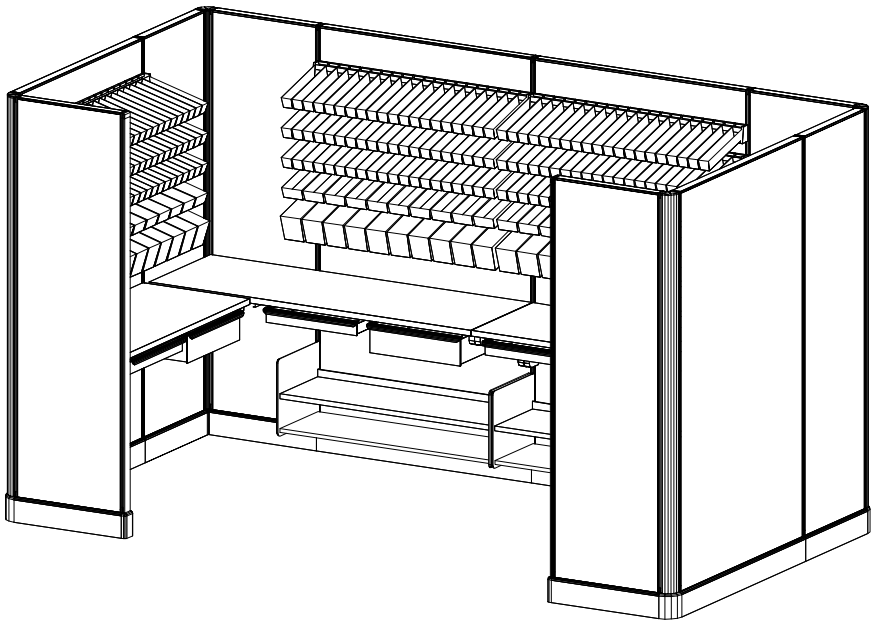

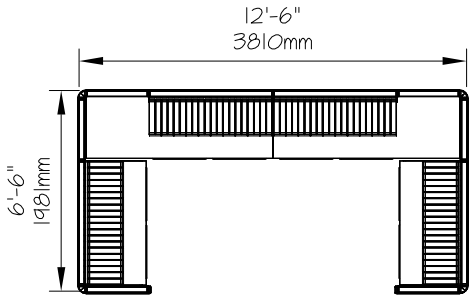


| QTY | DESCRIPTION |
|---|---|
| 6 | Solid Panel, 85"H (1219mm) x 24"W (610mm) |
| 4 | Solid Panel, 85"H (2159mm) x 48"W (1219mm) |
| 4 | Panel Connector, 90 Degree Corner, 85"H (2159mm) |
| 2 | Extra Deep Shelf W/Add-on |
| 2 | Cantilevered, Work Surface 48"W (1219mm) |
| 2 | Cantilevered, Work Surface 72"W (1829mm) |
| 5 | Panel-to-Panel Connector |
| 2 | Finished End Hardware |
| 20 | Dispensing Rails, 48"W (1219mm) |
| 40 | Bins, 4 1/2"W (114mm) x 2 1/4"H (57mm) |
| 40 | Bins, 4 1/2"W (114mm) x 5 1/4"H (133mm) |
| 240 | Bins, 2 1/4"W (57mm) x 2 1/4"H (57mm) |
| 4 | Drawer, 3"H (76mm) |
| 4 | Drawer, 6"H (152mm) |
| | Drawer Organizer Bins |

# E0657

PHARMACY,STORAGE U-SHAPE,FREE STD,55x155

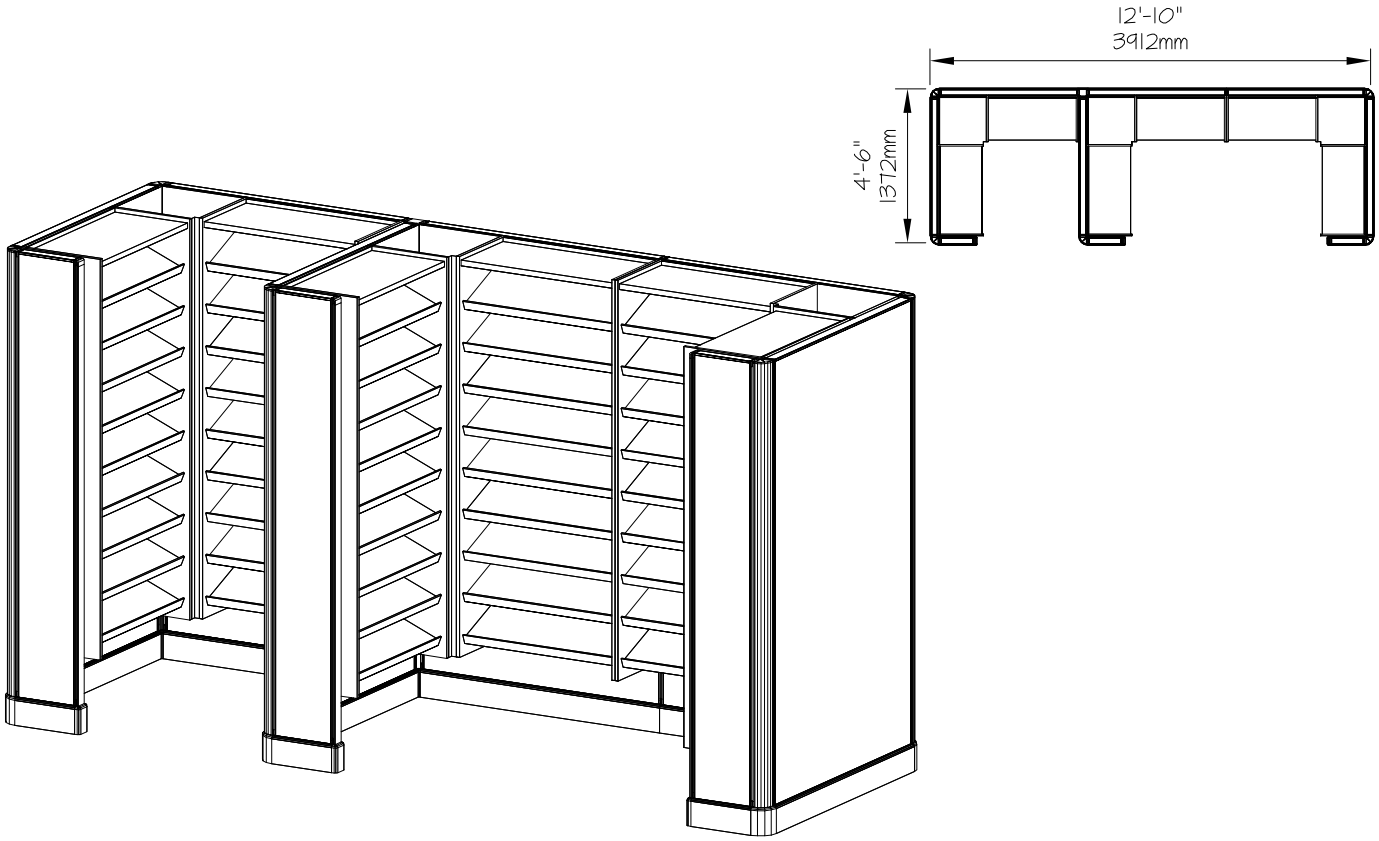


| QTY | DESCRIPTION |
|---|---|
| 3 | Solid Panel, 85"H (2159mm) x 24"W (305mm) |
| 6 | Solid Panel, 85"H (2159mm) x 48"W (1219mm) |
| 5 | Panel Connector, 2-Way Corner, 85"H (2159mm) |
| 1 | Panel Connector, 3-Way Corner, 85"H (2159mm) |
| 1 | Panel-to-Panel Connector |
| 3 | Finished End Hardware |
| 3 | 9 Shelf Unit, 90 Degree Corner, 48"W (1219mm) |

# E0660

PHARMACY,STORAGE,FREE STD,21x155

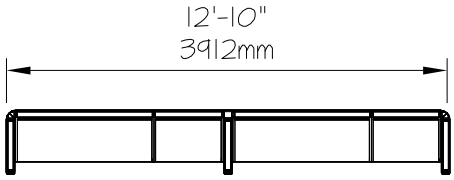


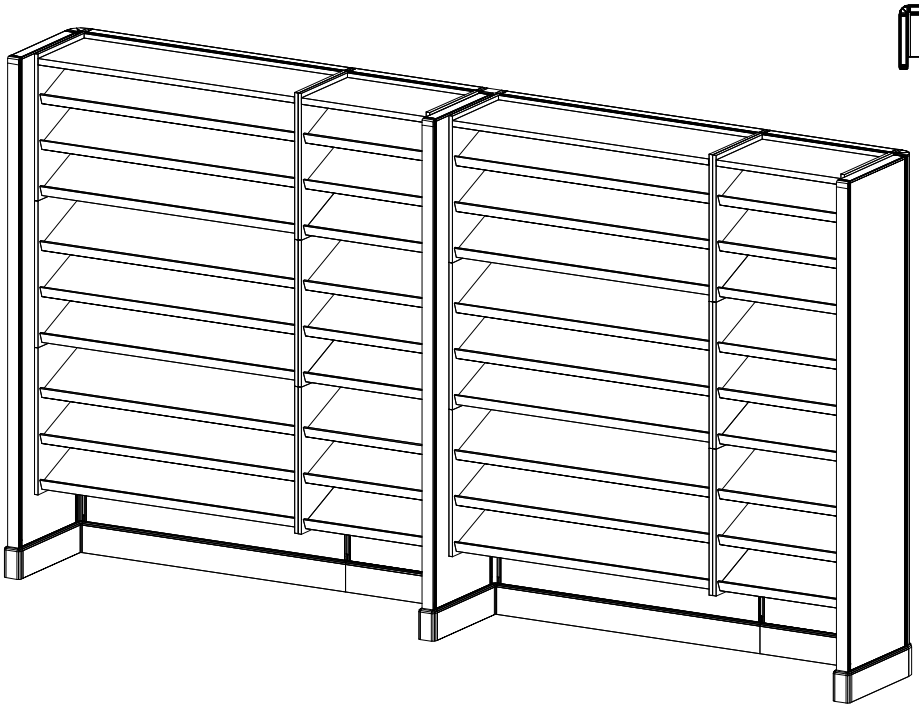

| QTY | DESCRIPTION |
|---|---|
| 3 | Solid Panel, 85"H (2159mm) x 18"W (458mm) |
| 2 | Solid Panel, 85"H (2159mm) x 24"W (610mm) |
| 2 | Solid Panel, 85"H (2159mm) x 48"W (1219mm) |
| 2 | Panel Connector, 2-Way Corner, 85"H (2159mm) |
| 1 | Panel Connector, 3-Way Corner, 85"H 2159mm) |
| 2 | Panel-to-Panel Connector |
| 3 | Finished End Hardware |
| 6 | 3 Shelf unit 24"W (610mm) |
| 6 | 3 Shelf Unit, 48"W (1219mm) |

# E0665

## Military Pharm Typicals

### Low Vol – Bulk Storage

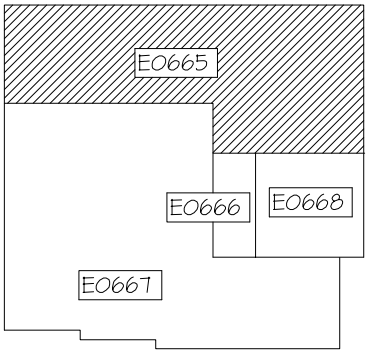


KEY PLAN

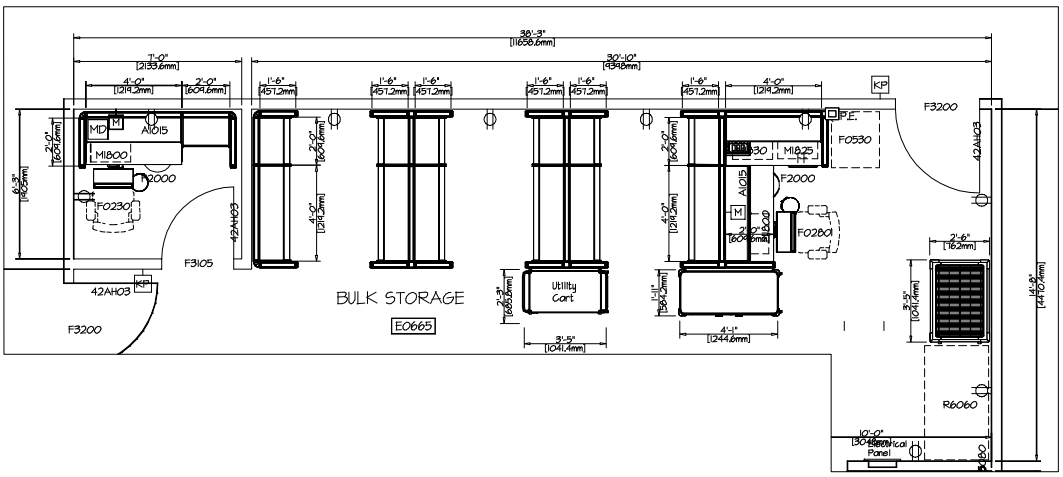


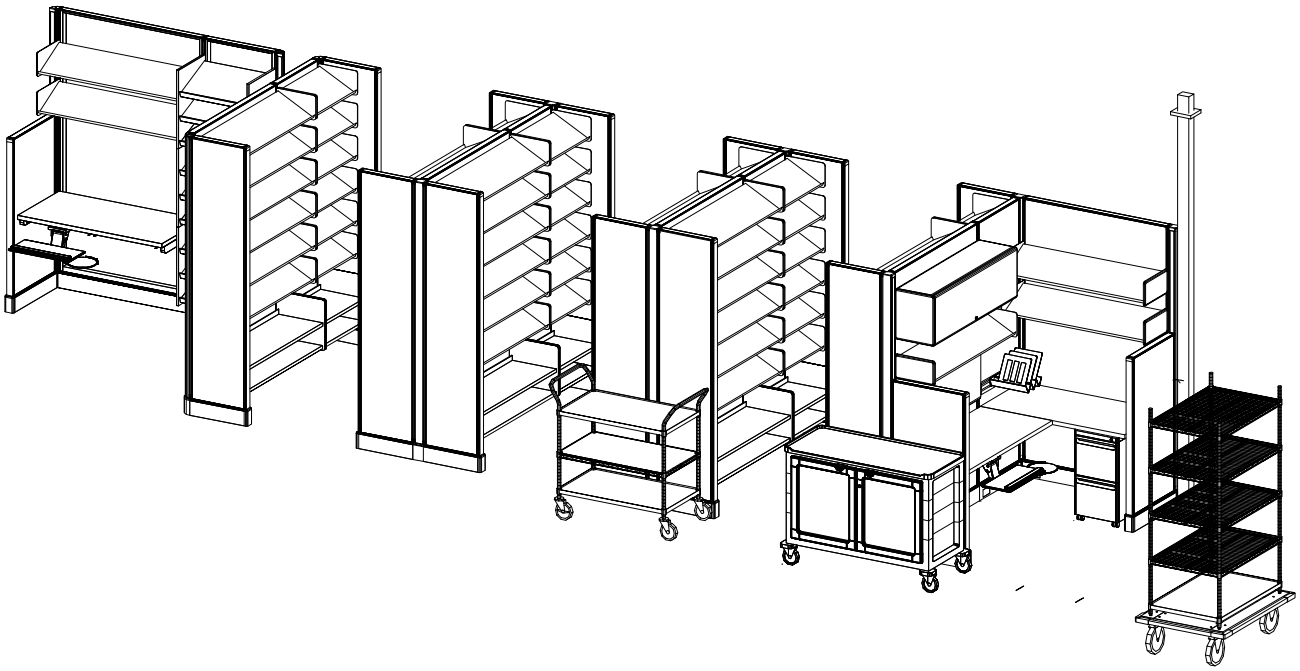

**MILITARY PHARMACY TYPICALS - LOW VOLUME**

6/15/2020

**COMPONENT LIST BY DEPARTMENT**

*EO665 BULK STORAGE*

| | |
|---|---|
| 4 | Panel,Hard Npwr 53”H (1346mm) x 24”W (610mm) |
| 12 | Panel,Hard Npwr 85”H (2159mm) x 18”W (457mm) |
| 1 | Panel,Hard Power 85”H (2159mm) x 24”W (610mm) |
| 3 | Panel,Hard Npwr 85”H (2159mm) x 24”W (610mm) |
| 2 | Panel,Hard Power 85”H (2159mm) x 48”W (1219mm) |
| 3 | Panel,Hard Npwr 85”H (2159mm) x 48”W (1219mm) |
| 1 | Open Panel Frame Npwr 85”H (2159mm) x 24”W (610mm) |
| 1 | Open Panel Frame Npwr 85”H (2159mm) x 48”W (1219mm) |
| 4 | Conn,2-Way 90 Deg Hard 85”H (2159mm) |
| 7 | Conn,3-Way 90 Deg Hard 85”H (2159mm) |
| 1 | Duplex Rcp, 6/Pkg |
| 1 | Duplex Rcp, Dedicated 6/Pkg |
| 1 | Ceiling Pwr Entry, Pwr 85”H (2159mm) |
| 2 | Wk Surf, Lam 48”W (1219mm) |
| 36 | Shelf,Storage/Display 24”W (610mm) |
| 41 | Shelf,Storage/Display 48”W (1219mm) |
| 1 | Flip Dr Unit, Fab,W/Lock 48”W (1219mm) |
| 1 | Tackboard, 48”W (1219mm) |
| 1 | Tool Bar, 24”W (610mm) |
| 1 | Work Surf,Hvy-Duty 24”D, With Supports (610mm) x 48”W (1219mm) |
| 6 | Shelf, 24”W (610mm) |
| 6 | Shelf, 48”W (1219mm) |
| 6 | Shelf,Add-On 24”W (610mm) |
| 6 | Shelf,Add-On 48”W (1219mm) |
| 3 | Shelf Unit,3 Shlvs 24”W (610mm) |
| 1 | Cart, Enclosed Body, Top Spine, 2 Drawers, 2 Dbl Wide Wire Shelf, Dividers, Solid Dbl Wide Doors, 36”H (914mm) |
| 1 | Cart, W/Push Handles, Mobile, 1 Wire Shelf, 2 Solid Shelf 21”D (533mm) x 36”W (914mm) |
| 1 | Cart, Mobile Dolly Base, 4 Wire Shelf, Solid Shelf, 24”D (610mm) x 36”W (914mm) |
| 1 | Ped, Mobile, File/File |
| 2 | Task Light, 42”W (1067mm) |
| 1 | Diag Tray |
| 2 | Keybd Tray,Fully Adj. |

*Connecting hardware required to complete installation.

# E0666

## Military Pharm Typicals

### Low Vol – Manuf & Prepack

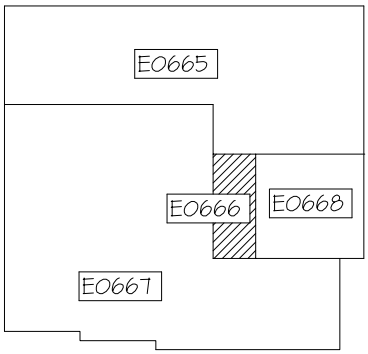


KEY
PLAN

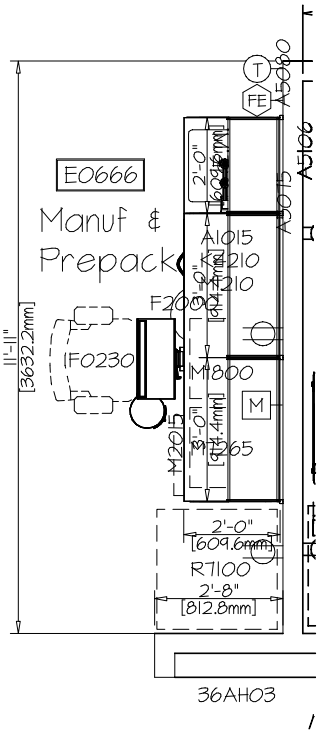


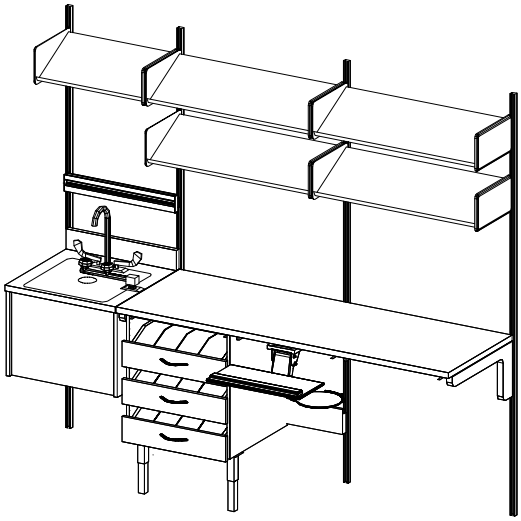

**MILITARY PHARMACY TYPICALS - LOW VOLUME**

6/15/2020

**COMPONENT LIST BY DEPARTMENT**

*E0666 MANUFACTURING AND PREPACK*

1 Shelf,Storage/Display 24”W (610mm)
4 Shelf,Storage/Display 36”W (914mm)
4 Wall Strip 84”H (2134mm)
1 Equip Rail, 24”W (610mm)
1 Adapter Rail, 36”W (914mm)
1 Work Surf,Hvy-Duty 24”D, With Supports (610mm) x 72”W (1829mm)
1 Module,Cant Sink-Adaptable, w/Corain Top, 24”D (610mm) x 24”W (610mm)
1 Storage Case, 3 Bottle Dwrs, Legs
1 Eyewash
1 Keybd Tray,Fully Adj..
1 Sink and Faucet Assembly

# E0667

## Military Pharm Typicals

### Low Vol – Disp & Storage

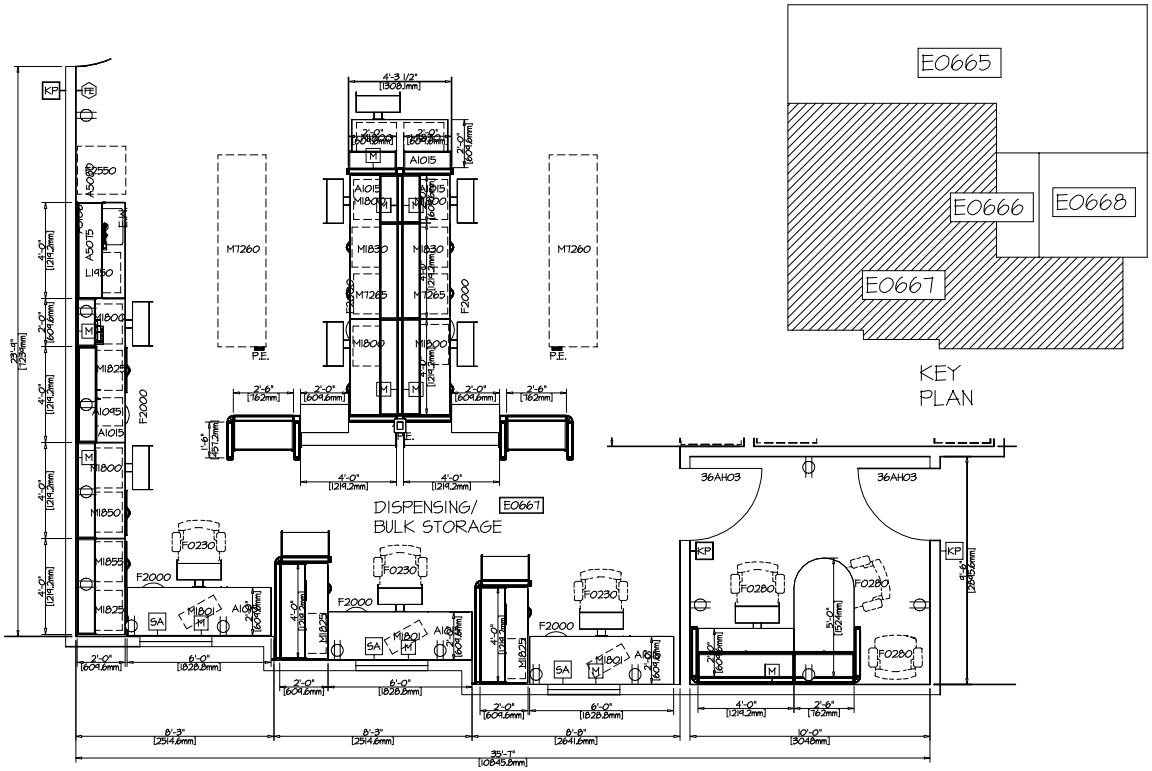


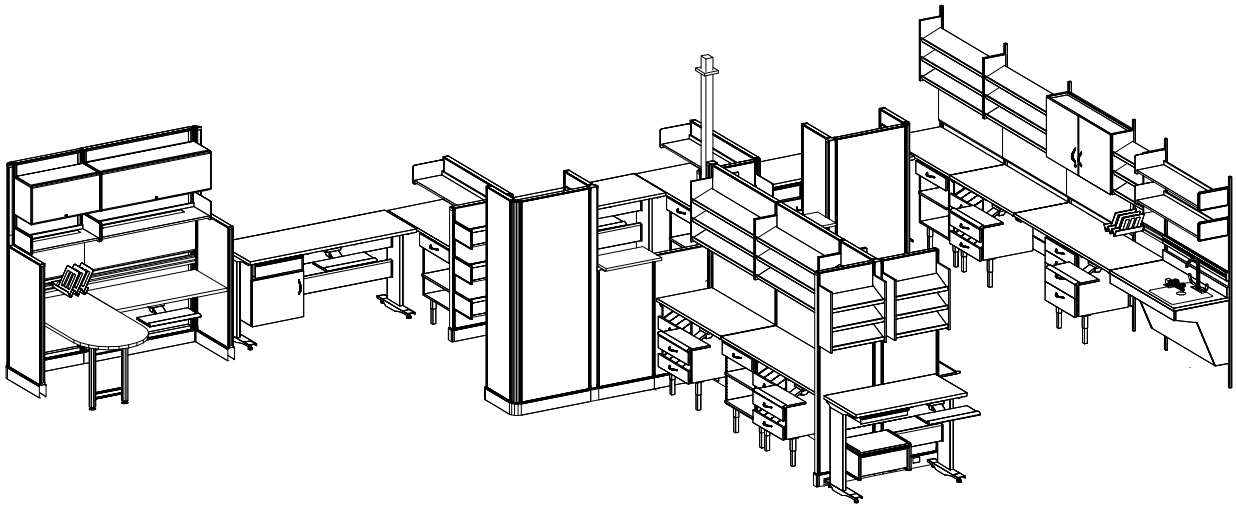

**MILITARY PHARMACY TYPICALS - LOW VOLUME**

6/15/2020

**COMPONENT LIST BY DEPARTMENT**

*EO667 DISPENSING AND STORAGE*

| | |
|---|---|
| 8 | Panel,Hard Npwr 53”H (1346mm) x 24”W (610mm) |
| 2 | Panel,Hard Npwr 53”H (1346mm) x 48”W (1219mm) |
| 4 | Panel,Hard Npwr 85”H (2159mm) x 18”W (457mm) |
| 3 | Panel,Hard Pwr 85”H (2159mm) x 24”W (610mm) |
| 2 | Panel,Hard Npwr 85”H (2159mm) x 30”W (762mm) |
| 2 | Panel,Hard Pwr 85”H (2159mm) x 48”W (1219mm) |
| 1 | Open Panel Frame Npwr 85”H (2159mm) x 30”W (762mm) |
| 1 | Open Panel Frame Npwr 85”H (2159mm) x 48”W (1219mm) |
| 1 | Ceiling Pwr Entry, Pwr 85”H (2159mm) |
| 1 | Wk Surf, Lam 24”D (610mm) x 48”W (1219mm) |
| 1 | Penin,Wk Surf, Lam 30”D (762mm) x 60”W (1524mm) |
| 2 | Trans Surf, Lam 24”W (610mm) |
| 6 | Shelf,Storage/Display 24”W (610mm) |
| 1 | Shelf,Storage/Display 30”W (762mm) |
| 11 | Shelf,Storage/Display 48”W (1219mm) |
| 1 | Flip Dr Unit, W/Lock, 30”W (762mm) |
| 1 | Flip Dr Unit, W/Lock, 48”W (1219mm) |
| 1 | Tackboard, 30”W (762mm) |
| 4 | Tackboard, 48”W (1219mm) |
| 1 | Tool Bar, 24”W (610mm) |
| 1 | Tool Bar, 30”W (762mm) |
| 3 | Tool Bar, 48”W (1219mm) |
| 6 | Wall Strip 84”H (2134mm) |
| 1 | Equip Rail,Wall-Mt,48”W (1219mm) |
| 9 | Adapter Rail,48”W (1219mm) |
| 6 | Work Surf,Hvy-Duty 24”D, With Supports (610mm) x 48”W (1219mm) |
| 3 | Work Surf,Hvy-Duty 24”D, With Supports (610mm) x 72”W (1829mm) |
| 1 | ADA Sink, Systems Mounted, w/Corain Top, 24”D (610mm) x 48”W (1219mm) |
| 1 | Table,Process w/Glides Adj Ht 24”D (610mm) x 48”W (1219mm) |
| 3 | Table,Process w/Glides Adj Ht 24”D (610mm) x 72”W (1829mm) |
| 3 | Storage Unit W/Door |
| 5 | Shelf Unit,3 Shlvs, 24”W (610mm) |
| 7 | Shelf Unit,3 Shlvs, 48”W (1219mm) |
| 6 | Shelf Unit,3 Shlvs, 30”W (762mm) |
| 1 | Shelf Unit,Dbl Drs, 48”W (1219mm) |
| 11 | Storage Case |
| 7 | Storage Case Shelf |
| 7 | Storage Case Dwr, 5”H (127mm), No Lock |
| 2 | Storage Case Dwr, 7 ½”H (191mm), No Lock |
| 15 | Storage Case Bottle Dwr, 5”H (127mm) |
| 11 | Storage Case Leg |
| 1 | Wk Surf w/Backsplash 24”D (610mm) x 48”W (1219mm) |
| 1 | Storage Frame Lid |
| 1 | Storage Frame |
| 1 | Drw, 3”H (76mm) |
| 3 | Drw, 6”H (152mm) |

## COMPONENT LIST BY DEPARTMENT

| | |
|---|---|
| 1 | Drw, 9”H (229mm) |
| 1 | Eyewash |
| 1 | Task Light, 30”W (762mm) |
| 1 | Task Light, 42”W (1067mm) |
| 4 | Paper Tray |
| 2 | Diag Tray |
| 3 | Shelf Div 8/Pkg |
| 11 | Keybd Tray,Fully Adj |
| 1 | ADA Sink & Faucet Assy. |

*Connecting hardware required to complete installation.

# E0668

## Military Pharm Typicals

### Low Vol – IV Admixture

Plan Scale: 1/4" = 1'

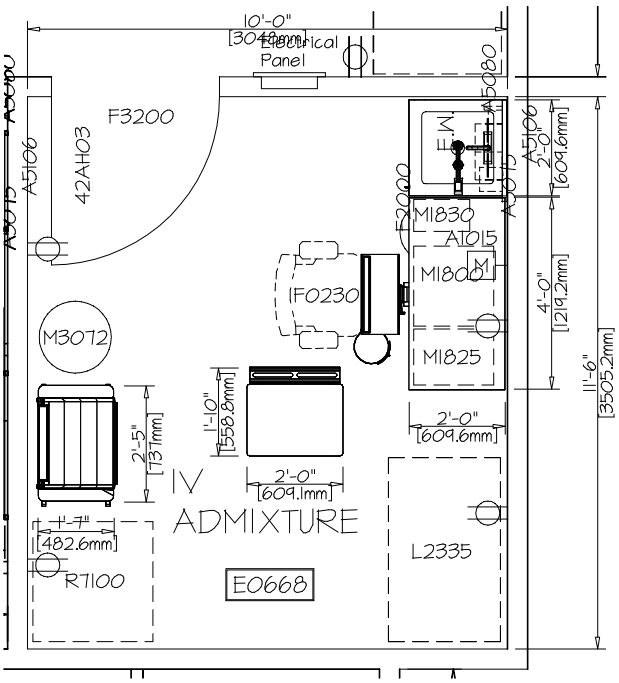


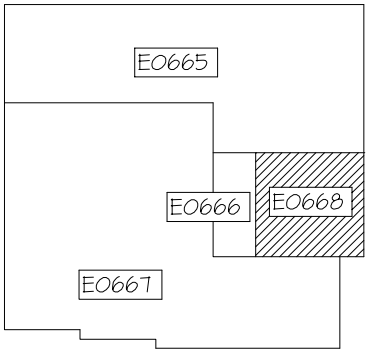


KEY
PLAN

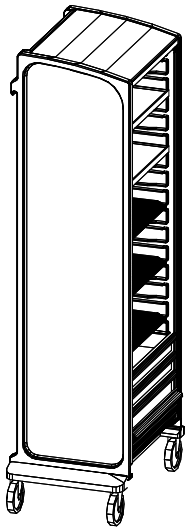

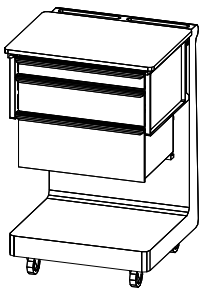

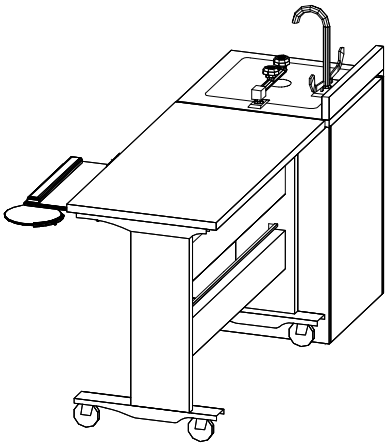

**MILITARY PHARMACY TYPICALS - LOW VOLUME**

6/15/2020

**COMPONENT LIST BY DEPARTMENT**

*E0668 I.V. ADMIXTURE*

| | |
|---|---|
| 1 | Table,Process w/Casters Adj Ht 48”W (1219mm) |
| 1 | Freestanding Sink Adaptable Cabinet w/Backsplash, w/Corian Top, 24”W (610mm) |
| 2 | Tray/Shelf |
| 1 | Storage Frame |
| 3 | Drw, 3”H (76mm) |
| 2 | Drw, 6”H (152mm) |
| 1 | Drw, 9”H (229mm) |
| 1 | Mobile Cart W/Top Surface |
| 3 | Wire Shelf |
| 1 | Locker on Wheels W/Door |
| 1 | Eyewash. |
| 1 | Keybd Tray,Fully Adj. |
| 1 | Sink and Faucet Assembly |
| | Drawer Organizer Bins |

# E0673

## Military Pharm Typicals

### Med Vol – Bulk Storage

Plan Scale: 1/8" = 1'

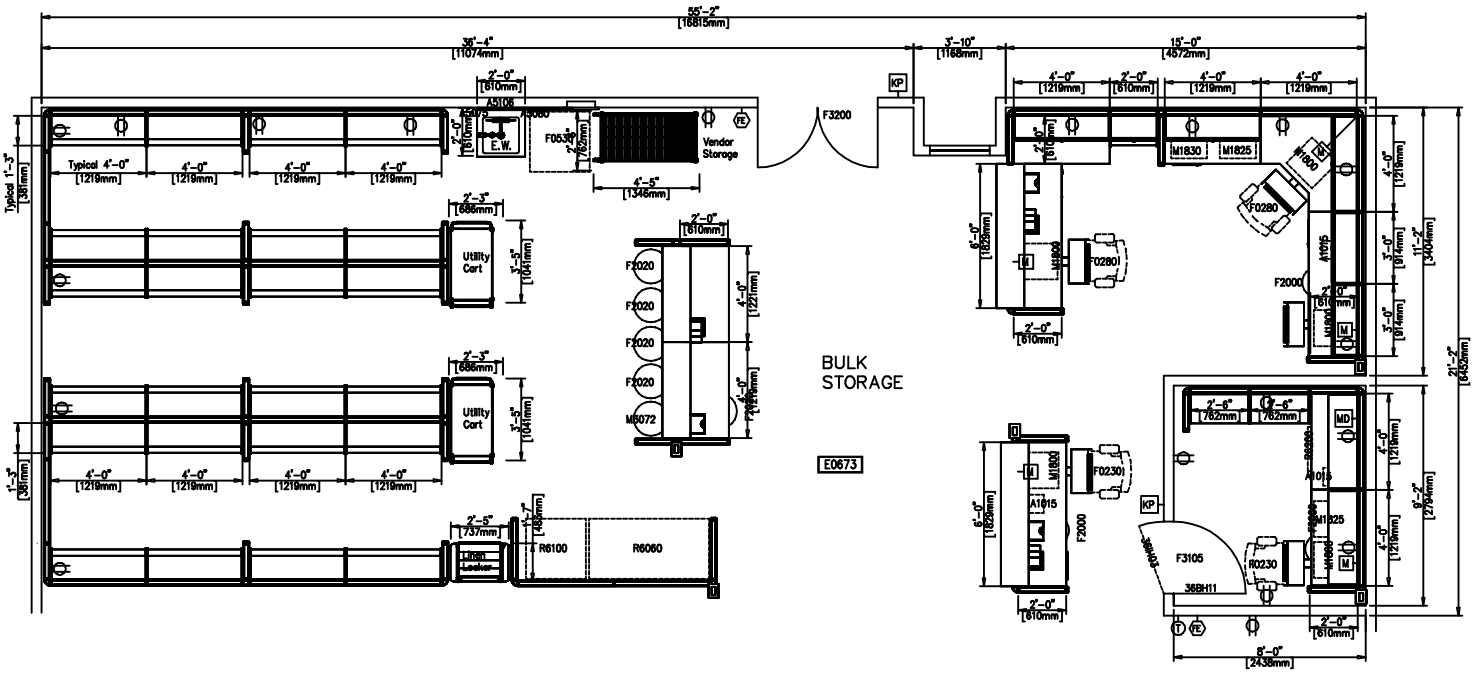


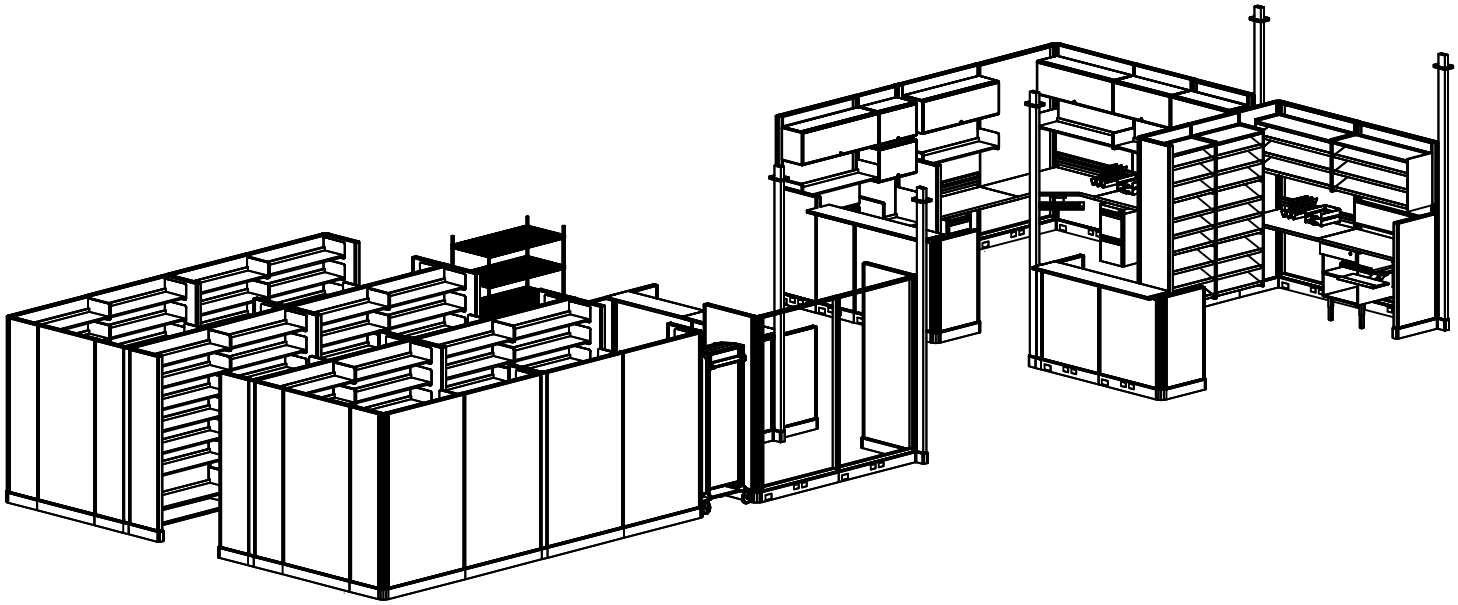

**MILITARY PHARMACY TYPICALS - MEDIUM VOLUME**

8/28/2023

**COMPONENT LIST BY DEPARTMENT**

*E0673 BULKSTOR*

| | |
|---|---|
| 2 | Panel,Hard Npwr 47”H (1194mm) x 18”W (457mm) |
| 1 | Panel,Hard Pwr 47”H (1194mm) x 24”W (610mm) |
| 5 | Panel,Hard Npwr 47”H (1194mm) x 24”W (610mm) |
| 2 | Panel,Hard Pwr W/Com Port 47”H (1194mm) x 36”W (914mm) |
| 3 | Panel,Hard Pwr W/Com Port 47”H (1194mm) x 48”W (1219mm) |
| 1 | Panel,Hard Pwr 53”H (1346mm) x 24”W (610mm) |
| 3 | Panel,Hard Npwr 53”H (1346mm) x 24”W (610mm) |
| 19 | Panel,Hard Npwr 85”H (2159mm) x 18”W (457mm) |
| 1 | Panel,Hard Pwr 85”H (2159mm) x 24”W (610mm) |
| 1 | Panel,Hard Npwr 85”H (2159mm) x 24”W (610mm) |
| 4 | Panel,Hard Npwr 85”H (2159mm) x 30”W (762mm) |
| 1 | Panel,Hard Pwr 85”H (2159mm) x 36”W (914mm) |
| 1 | Panel,Hard Npwr 85”H (2159mm) x 36”W (914mm) |
| 1 | Panel,Hard Npwr 85”H (2159mm) x 42”W (1067mm) |
| 2 | Panel,Hard Pwr 85”H (2159mm) x 48”W (1219mm) |
| 16 | Panel,Hard Npwr 85”H (2159mm) x 48”W (1219mm) |
| 1 | Open Panel Frame Pwr W/Com Port 85”H (2159mm) x 36”W (914mm) |
| 6 | Open Panel Frame Pwr W/Com Port 85”H (2159mm) x 48”W (1219mm) |
| 3 | Duplex Rcp, 6/Pkg |
| 3 | Duplex Rcp, Dedicated 6/Pkg |
| 2 | Ceiling Pwr Entry, 47”H (1194mm) |
| 3 | Ceiling Pwr Entry, 85”H (2159mm) |
| 2 | Wk Surf, Lam 24”D (610mm) x 48”W (1219mm) |
| 3 | Wk Surf, Lam 24”D (610mm) x 72”W (1829mm) |
| 1 | Wk Surf, Corner, Lam 24”D (610mm) x 48”W (1219mm) |
| 2 | Trans Surf, Lam Top 48”W (1219mm) |
| 2 | Trans Surf, Lam Top 72”W (1829mm) |
| 2 | Shelf, 24”W (610mm) |
| 2 | Shelf,Storage/Display 36”W (914mm) |
| 147 | Shelf,Storage/Display 48”W (1219mm) |
| 2 | Flip Dr Unit, Fab,W/Lock 24”W (610mm) |
| 2 | Flip Dr Unit, Fab,W/Lock 36”W (914mm) |
| 3 | Flip Dr Unit, Fab,W/Lock 48”W (1219mm) |
| 3 | Tackboard, 36”W (914mm) |
| 4 | Tackboard, 48”W (1219mm) |
| 1 | Tool Bar, 24”W (610mm) |
| 3 | Tool Bar, 36”W (914mm) |
| 7 | Tool Bar, 48”W (1219mm) |
| 1 | Equip Rail,Wall-Mt,48”W (1219mm) |
| 1 | Adapter Rail,48W (1219mm) |
| 1 | Work Surf,Hvy-Duty 24”D, With Supports (610mm) x 48”W (1219mm) |
| 1 | Work Surf 24”D, With Supports (610mm) x 48”W (1219mm) |
| 24 | Shelf, 48”W (1219mm) |
| 24 | Shelf,Add-On 48”W (1219mm) |
| 2 | Table,Process w/Casters Adj Ht 24”D (610mm) x 48”W (1219mm) |
| 6 | Shelf Unit,3 Shlvs 30”W (762mm) |

## COMPONENT LIST BY DEPARTMENT

| | |
|---|---|
| 2 | Shelf Unit,3 Shlvs 48”W (1219mm) |
| 2 | Shelf Unit,Add On, 30”W (762mm) |
| 2 | Shelf Unit,Add On, 48”W (1219mm) |
| 1 | Storage Case, W/Shelf, Drawer, Legs |
| 1 | ADA Sink, Wall Mounted, w/Corian Top, 24”D (610mm) x 24”W (610mm) |
| 2 | Support Frame |
| 6 | Drw, 3”H (76mm) |
| 4 | Drw, 6”H (152mm) |
| 2 | Drw, 9”H (229mm) |
| 4 | Wire Shelf |
| 1 | Locker on Wheels W/O Lock, W/ Door |
| 1 | Cart, Mobile, 5 Wire Shelves, 68”H (1727mm) x 24”D (610mm) x 48”W (1219mm) |
| 2 | Cart, W/Push Handles, Mobile, 3 Solid Shelves, 21”D (533mm) x 36”H (914mm) |
| 1 | Eyewash |
| 2 | Ped, Mobile Box/File |
| 1 | Ped, Mobile, Box/Box/File |
| 1 | Ped, Stationary File/File |
| 3 | Utility Tray,Ped |
| 5 | Task Light, 42”W (1067mm) |
| 1 | Task Light,Trans Surf 24”W (610mm) |
| 14 | Paper Tray |
| 7 | Diag Tray |
| 5 | Keybd Tray,Fully Adj, W/Mouse Tray W/Palm Rest |
| 1 | ADA Sink & Faucet Assy. |
| | Drawer Organizer Bins |

*Connecting hardware required to complete the installation.

# E0674

## Military Pharm Typicals

### Med Vol – Manuf & Prepack

Plan Scale: 1/8" = 1'

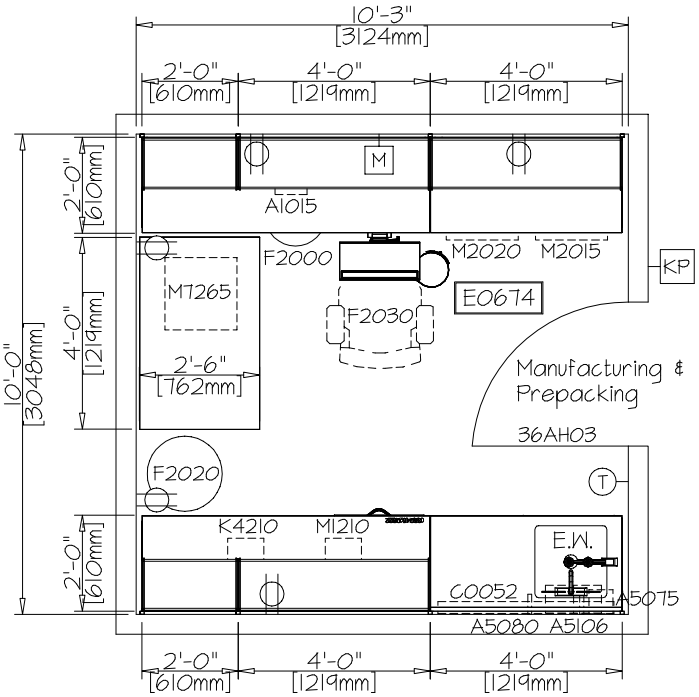


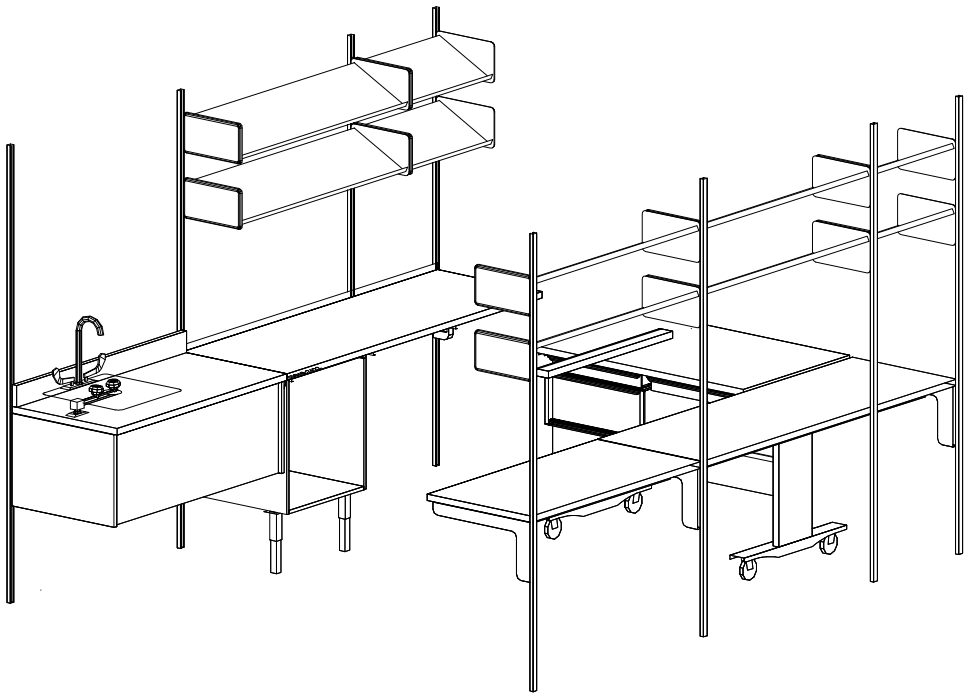

**COMPONENT LIST BY DEPARTMENT**

*E0674 MFG PRPK*

| | |
|---|---|
| 4 | Shelf,Storage/Display, 24”W (610mm) |
| 6 | Shelf,Storage/Display, 48”W (1219mm) |
| 8 | Wall Strip 84”H (2134mm) |
| 1 | Adapter Rail,48”W (1219mm) |
| 1 | Work Surf,Hvy-Duty 24”D, With Supports (610mm) x 48”W (1219mm) |
| 2 | Work Surf,Hvy-Duty 24”D, With Supports (610mm) x 72”W (1829mm) |
| 1 | Module,Cant Sink-Adaptable, w/Corian Top, 24”D (610mm) x 48”W (1219mm) |
| 1 | Table,Process w/Casters Adj Ht 30”D (762mm) x 48”W (1219mm) |
| 1 | Storage Case, 3 Bottle Dwrs, Legs |
| 1 | Support Frame |
| 2 | Drw, 3”H (76mm) |
| 2 | Drw, 9”H (229mm) |
| 1 | Eyewash. |
| 2 | Task Light, 42”W (1041mm) |
| 1 | Keybd Tray,Fully Adj. |
| 1 | Sink and Faucet Assembly |
| | Drawer Organizer Bins |

*Connecting hardware required to complete the installation.

# E0675

## Military Pharm Typicals

## Med Vol – Dispens & Storage

Plan Scale: 1/8" = 1'

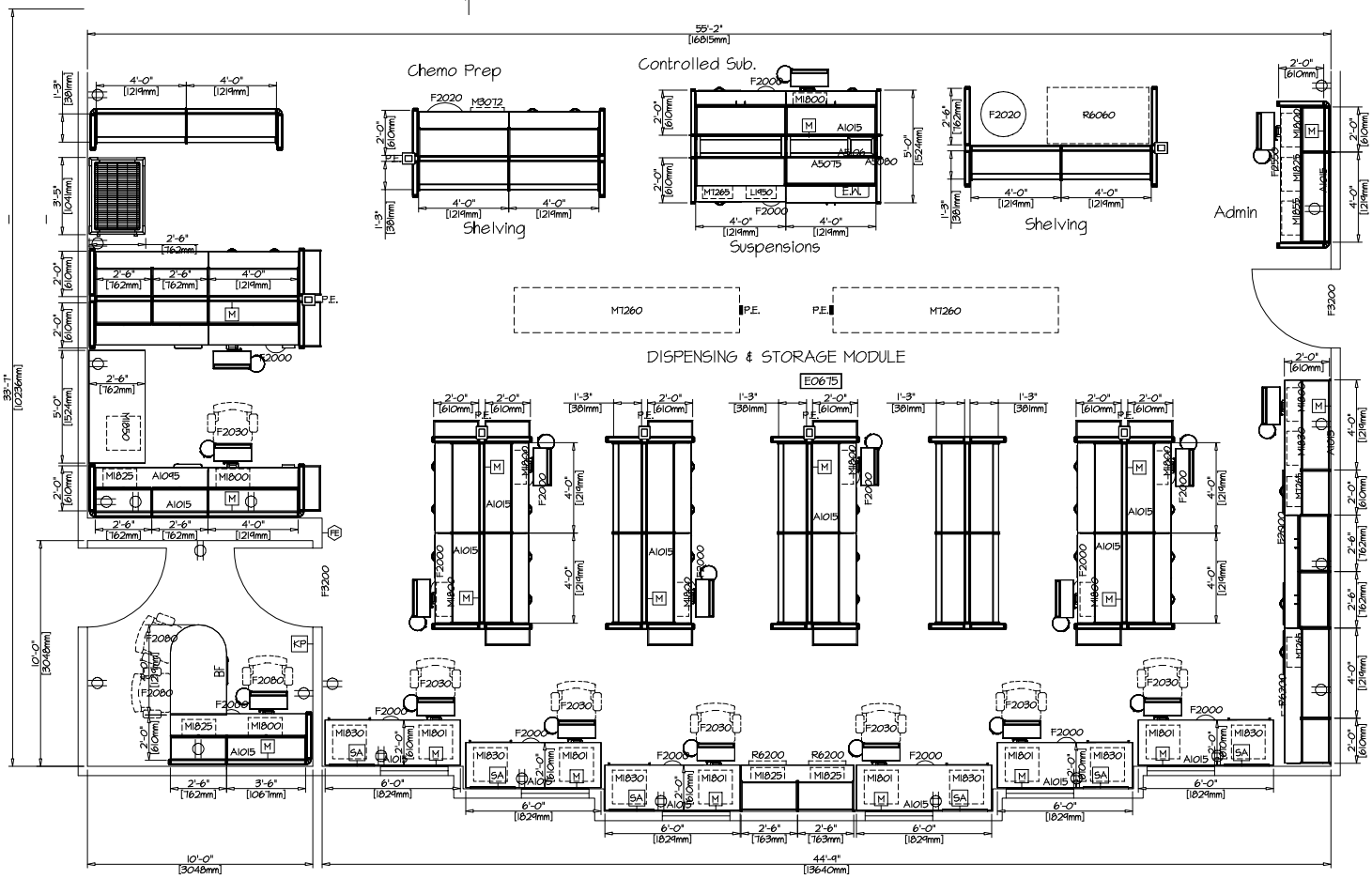


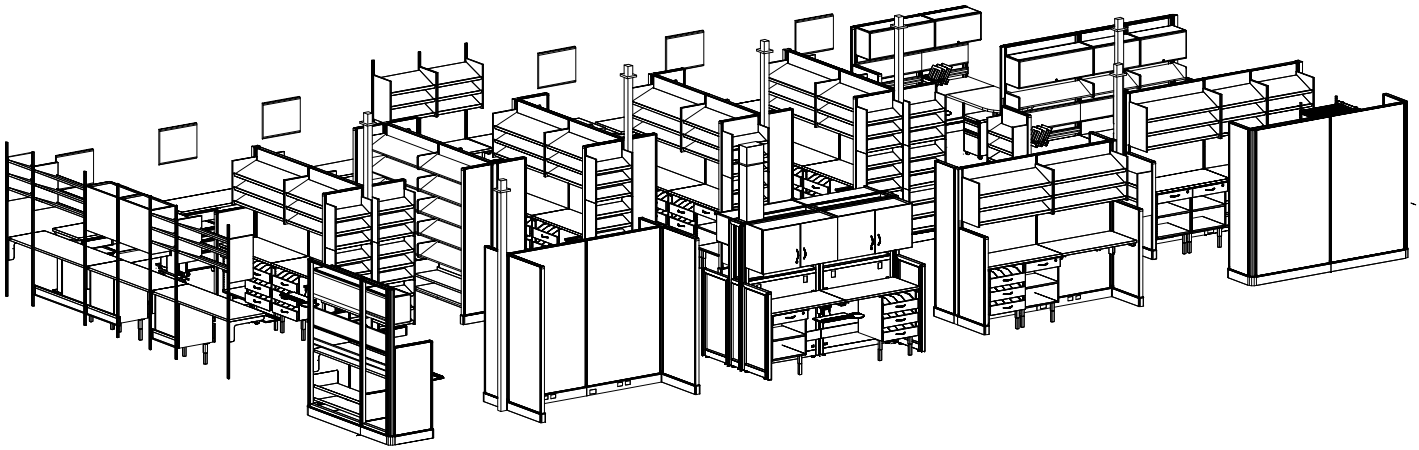

**COMPONENT LIST BY DEPARTMENT**

*E0675 DISP_STOR*

| | |
|---|---|
| 1 | Panel,Hard Npwr 47”H (1194mm) x 24”W (610mm) |
| 16 | Panel,Hard Npwr 53”H (1346mm) x 24”W (610mm) |
| 14 | Panel,Hard Npwr 85”H (2159mm) x 18”W (457mm) |
| 6 | Panel,Hard Npwr 85”H (2159mm) x 24”W (610mm) |
| 2 | Panel,Hard Pwr 85”H (2159mm) x 30”W (762mm) |
| 2 | Panel,Hard Npwr 85”H (2159mm) x 30”W (762mm) |
| 13 | Panel,Hard Pwr W/Com Port 85”H (2159mm) x 48”W (1219mm) |
| 4 | Panel,Hard Npwr 85”H (2159mm) x 48”W (1219mm) |
| 1 | Open Panel Frame Npwr 67”H (1702mm) x 30”W (762mm) |
| 1 | Open Panel Frame Npwr 67”H (1702mm) x 42”W (1067mm) |
| 1 | Open Panel Frame Npwr 85”H (2159mm) x 24”W (610mm) |
| 2 | Open Panel Frame Npwr 85”H (2159mm) x 30”W (762mm) |
| 2 | Open Panel Frame Npwr 85”H (2159mm) x 48”W (1219mm) |
| 1 | Duplex Rcp, 6/Pkg |
| 1 | Duplex Rcp, Dedicated 6/Pkg |
| 7 | Ceiling Pwr Entry,Int Direct Conn,Pwr 85”H (2159mm) |
| 1 | Wk Surf, Lam 24”D (610mm) x 72”W (1829mm) |
| 1 | Penin, Round-End Lam 30”D (762mm) x 48”W (1219mm) |
| 1 | Support Panel,Wk Surf,End Lam 24”D (1219mm) |
| 4 | Shelf,Storage/Display 30”W (762mm) |
| 72 | Shelf,Storage/Display 48”W (1219mm) |
| 1 | Flip Dr Unit, Fab, W/Lock 24”W (610mm) |
| 5 | Flip Dr Unit, Fab, W/Lock 30”W (762mm) |
| 1 | Flip Dr Unit, Fab, W/Lock 42”W (1067mm) |
| 4 | Flip Dr Unit, Fab, W/Lock 48”W (1219mm) |
| 7 | Tackboard, 24”W (610mm) |
| 5 | Tackboard, 30”W (762mm) |
| 1 | Tackboard, 42”W (1067mm) |
| 3 | Tackboard, 48”W (1219mm) |
| 1 | Tool Bar, 24”W (610mm) |
| 1 | Tool Bar, 30”W (762mm) |
| 1 | Tool Bar, 42”W (1067mm) |
| 3 | Tool Bar, 48”W (1219mm) |
| 10 | Wall Strip 84”H (2134mm) |
| 2 | Module,Pass-Through 80”H (2032mm) x 48”W (1219mm) |
| 4 | Panel,Support 48”H (1219mm) x 24”W (610mm) |
| 1 | Equip Rail,Wall-Mt,48”W (1219mm) |
| 3 | Acc Panel Assy,Combo 42”H (1067mm) x 43-1/4”W (1099mm) 2/Pkg |
| 1 | Vert Chase Cover |
| 1 | Adapter Rail,24”W (610mm) |
| 1 | Adapter Rail,30”W (762mm) |
| 18 | Adapter Rail,48”W (1219mm) |
| 20 | Work Surf,Hvy-Duty 24”D, With Supports (610mm) x 48”W (1219mm) |
| 5 | Work Surf,Hvy-Duty 24”D, With Supports (610mm) x 60”W (1524mm) |
| 3 | Work Surf,Hvy-Duty 24”D, With Supports (610mm) x 72”W (1829mm) |
| 15 | Shelf, 48”W (1219mm) |
| 1 | Shelf, 60”W (1524mm) |

**COMPONENT LIST BY DEPARTMENT**

| | |
|---|---|
| 16 | Shelf,Add-On w/Lip 48”W (1219mm) |
| 1 | Shelf,Add-On w/Lip 60”W (1829mm) |
| 6 | Table,Process w/Glides Adj Ht 24”D (610mm) x 72”W (1829mm) |
| 1 | Table,Process w/Casters Adj Ht 30”D (762mm) x 60”W (1524mm) |
| 25 | Shelf Unit,3 Shlvs, 9”D (229mm) x 24”W (610mm) |
| 2 | Shelf Unit,3 Shlvs, 16”D (406mm) x 24”W (610mm) |
| 6 | Shelf Unit,3 Shlvs, 16”D (406mm) x 30”W (762mm) |
| 20 | Shelf Unit,3 Shlvs, 16”D (406mm) x 48”W (1219mm) |
| 2 | Shelf Unit,Add On, 30”W (762mm) |
| 3 | Shelf Unit,Add On, 48”W (1219mm) |
| 2 | Shelf Unit,Dbl Drs, 30”W (762mm) |
| 2 | Shelf Unit,Dbl Drs, 48”W (1219mm) |
| 28 | Storage Case |
| 19 | Storage Case Shelf |
| 12 | Storage Case Dwr, 5”H (127mm) |
| 4 | Storage Case Dwr, 7 ½”H (191mm) |
| 2 | Storage Case Dwr, 10”H (254mm) |
| 45 | Storage Case Bottle Dwr |
| 28 | Storage Case Leg |
| 1 | Sink Base Cabinet, w/Dbl Dr,1 Shf , w/Corian Top, 24”D (610mm) x 48”W (1219mm) |
| 8 | Drw, 6”H (152mm) |
| 6 | Drawer Caddie w/Casters,W/Drawers |
| 1 | Cart, Mobile, W/Dolly Frame, 4 Wire Shelves, Solid Shelf, 24”D (610mm) x 36”W (914mm) |
| 1 | Eyewash |
| 1 | Ped, Mobile, Box/File |
| 2 | Ped, Stationary, File/File |
| 4 | Task Light, 30”W (762mm) |
| 6 | Task Light, 42”W (1067mm) |
| 2 | Paper Tray |
| 3 | Diag Tray |
| 18 | Keybd Tray,Fully Adj. W/Mouse Tray |
| 1 | Mouse Tray,Keybd Tray Att |
| 3 | CPU Holder,Vertical |
| 1 | Sink and Faucet Assembly, |

*Connecting hardware required to complete the installation.

# E0676

## Military Pharm Typicals

## Med Vol – Offsite Sat Pharm

Plan Scale: 1/8" = 1'

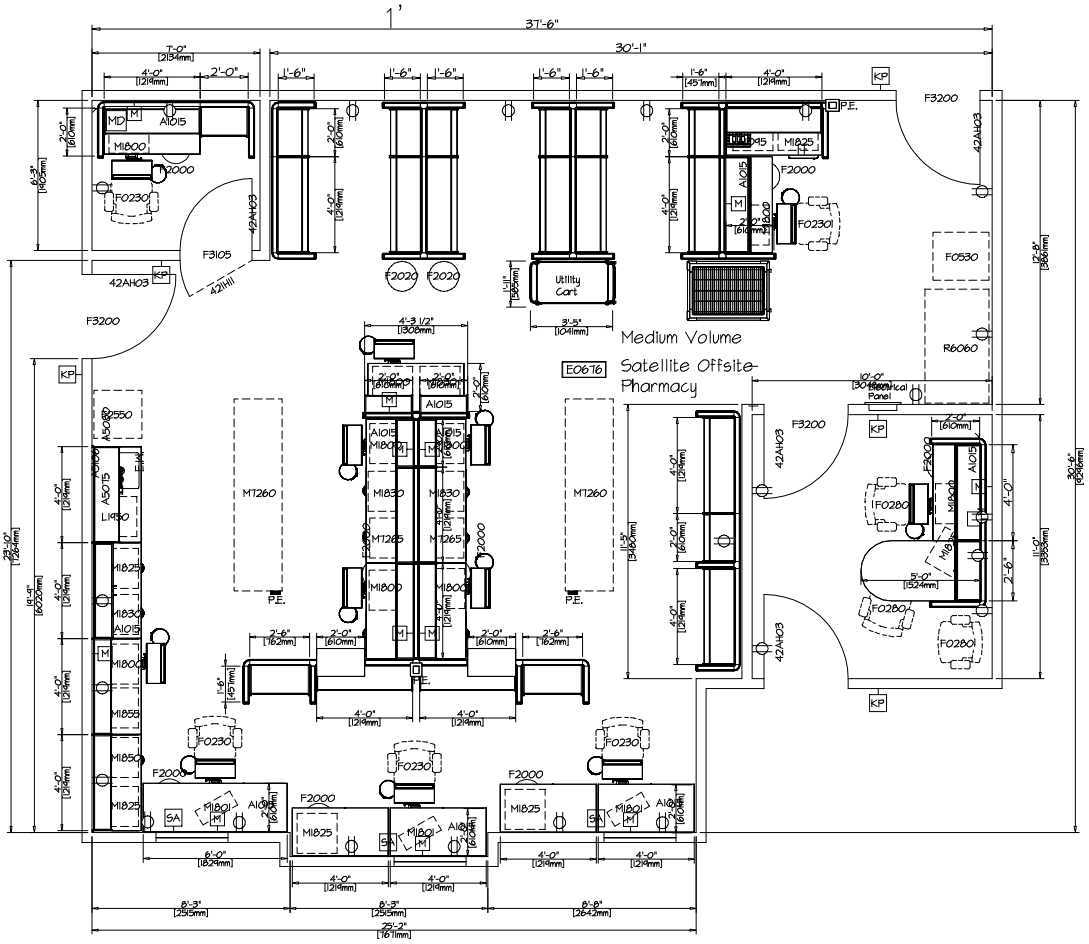


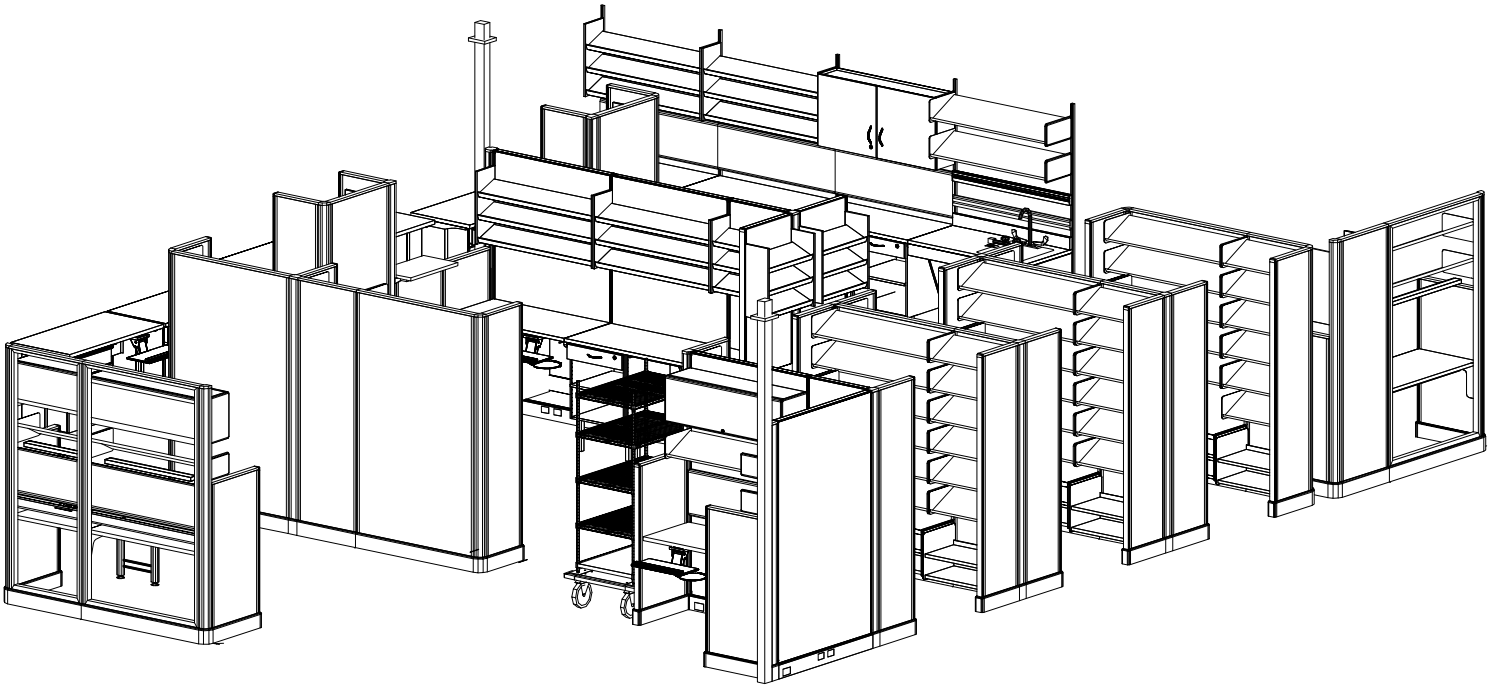

**COMPONENT LIST BY DEPARTMENT**

*E0676 OFFSITE SAT. PHARM.*

| | |
|---|---|
| 10 | Panel,Hard Npwr 53”H (1346mm) x 24”W (610mm) |
| 19 | Panel,Hard Npwr 85”H (2159mm) x 18”W (457mm) |
| 4 | Panel,Hard Pwr 85”H (2159mm) x 24”W (610mm) |
| 5 | Panel,Hard Npwr 85”H (2159mm) x 24”W (610mm) |
| 2 | Panel,Hard Npwr 85”H (2159mm) x 30”W (762mm) |
| 4 | Panel,Hard Pwr 85”H (2159mm) x 48”W (1219mm) |
| 5 | Panel,Hard Npwr 85”H (2159mm) x 48”W (1219mm) |
| 1 | Open Panel Frame Npwr 85”H (2159mm) x 30”W (762mm) |
| 2 | Open Panel Frame Npwr 85”H (2159mm) x 48”W (1219mm) |
| 2 | Duplex Rcp, 6/Pkg |
| 1 | Duplex Rcp, Dedicated 6/Pkg |
| 2 | Ceiling Pwr Entry, Npwr 85”H (2159mm) |
| 3 | Wk Surf, Lam 24”D (610mm) x 48”W (1219mm) |
| 1 | Penin, Round-End Lam 30”D (762mm) x 60”W (1524mm) |
| 2 | Trans Surf, Lam Top 24”W (610mm) |
| 42 | Shelf,Storage/Display 24”W (610mm) |
| 1 | Shelf,Storage/Display 30”W (762mm) |
| 61 | Shelf,Storage/Display 48”W (1219mm) |
| 1 | Flip Dr Unit, Fab,W/Lock 30”W (762mm) |
| 2 | Flip Dr Unit, Fab,W/Lock 48”W (1219mm) |
| 1 | Tackboard, 30”W (762mm) |
| 5 | Tackboard, 48”W (1219mm) |
| 1 | Tool Bar, 24”W (610mm) |
| 1 | Tool Bar, 30”W (762mm) |
| 1 | Tool Bar, 48”W (1219mm) |
| 5 | Wall Strip 84”H (2134mm) |
| 1 | Equip Rail,Wall-Mt,48”W (1219mm) |
| 7 | Adapter Rail,48”W (1219mm) |
| 6 | Work Surf,Hvy-Duty 24”D, With Supports (610mm) x 48”W (1219mm) |
| 2 | Work Surf,Hvy-Duty 24”D, With Supports (610mm) x 72”W (1829mm) |
| 1 | Sink Support, ADA, Systems Mounted, w/Corian Top, 24”D (610mm) x 48”W (1219mm) |
| 7 | Shelf, 24”W (610mm) |
| 8 | Shelf, 48”W (1219mm) |
| 7 | Shelf,Add-On 24”W (610mm) |
| 8 | Shelf,Add-On 48”W (1219mm) |
| 5 | Table,Process w/Glides Adj Ht 24”D (610mm) x 48”W (1219mm) |
| 1 | Table,Process w/Glides Adj Ht 24”D (610mm) x 72”W (1829mm) |
| 7 | Shelf Unit,3 Shlvs 24”W (610mm) |
| 7 | Shelf Unit,3 Shlvs 48”W (1219mm) |
| 6 | Shelf Unit,3 Shlvs 30”W (762mm) |
| 1 | Shelf Unit,Add On, 48”W (1219mm) |
| 1 | Shelf Unit,Dbl Drs, 48”W (1219mm) |
| 9 | Storage Case |
| 4 | Storage Case Shelf |
| 4 | Storage Case Dwr, 5”H (127mm) |
| 15 | Storage Case Bottle Dwr |
| 9 | Storage Case Leg |

## COMPONENT LIST BY DEPARTMENT

| | |
|---|---|
| 1 | Wk Surf w/Backsplash 24”D (610mm) x 48”W (1219mm) |
| 1 | Storage Frame Lid |
| 1 | Storage Frame |
| 1 | Drw, 3”H (76mm) |
| 5 | Drw, 6”H (152mm) |
| 1 | Drw, 9”H (229mm) |
| 1 | Cart, Mobile, W/Dolly Frame, 4 Wire Shelves, Solid Shelf, 24”D (610mm) x 36”W (914mm) |
| 1 | Cart, Mobile, W/Push Handles, 1 Wire Shelf, 2 Solid Shelves, 21”D (533mm) x 36”W (914mm) |
| 1 | Eyewash. |
| 1 | Ped, File/File |
| 1 | Task Light,30”W (762mm) |
| 3 | Task Light,42”W (1069mm) |
| 2 | Diag Tray |
| 3 | Shelf Div 8/Pkg |
| 12 | Keybd Tray,Fully Adj. |
| 1 | ADA Sink & Faucet Assy. |
| 5 | Storage Unit,W/Dr And Drw Slot |

*Connecting hardware required to complete the installation.

# E0677

## Military Pharm Typicals

### Med Vol – Unit Dose/IV Admix

Plan Scale: 1/8" = 1'

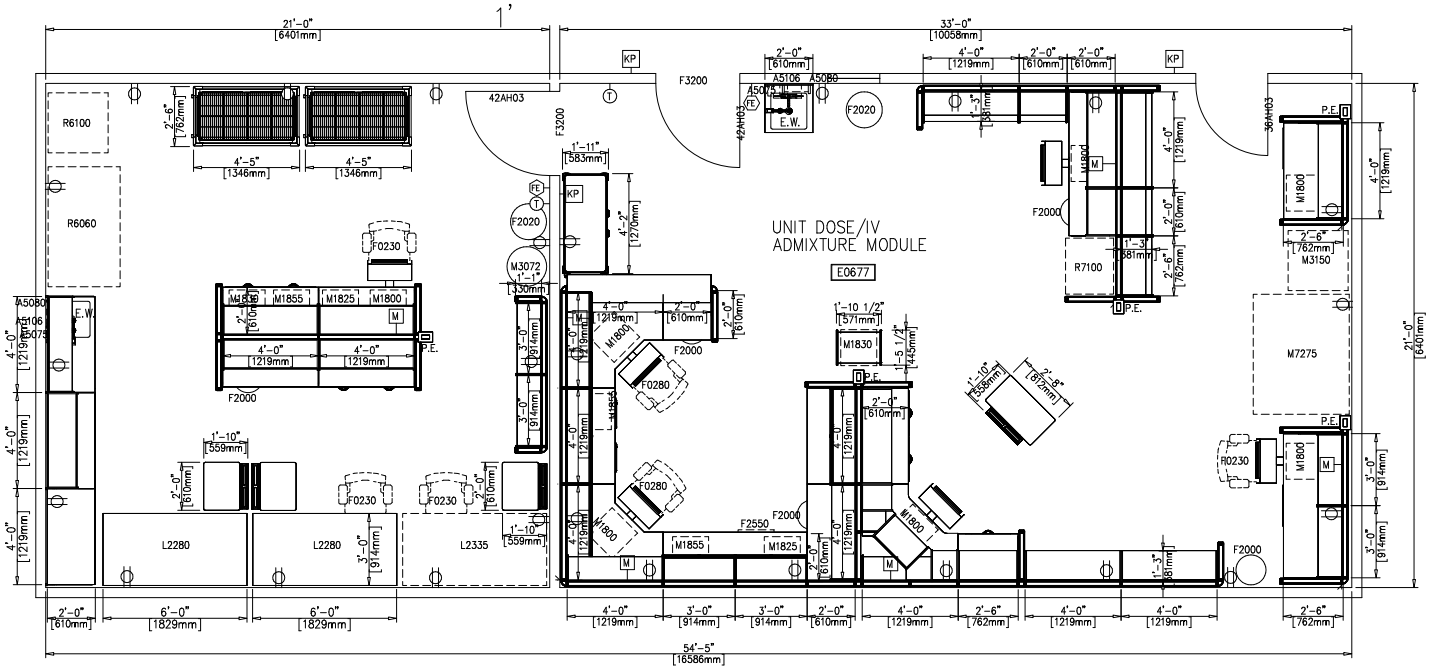


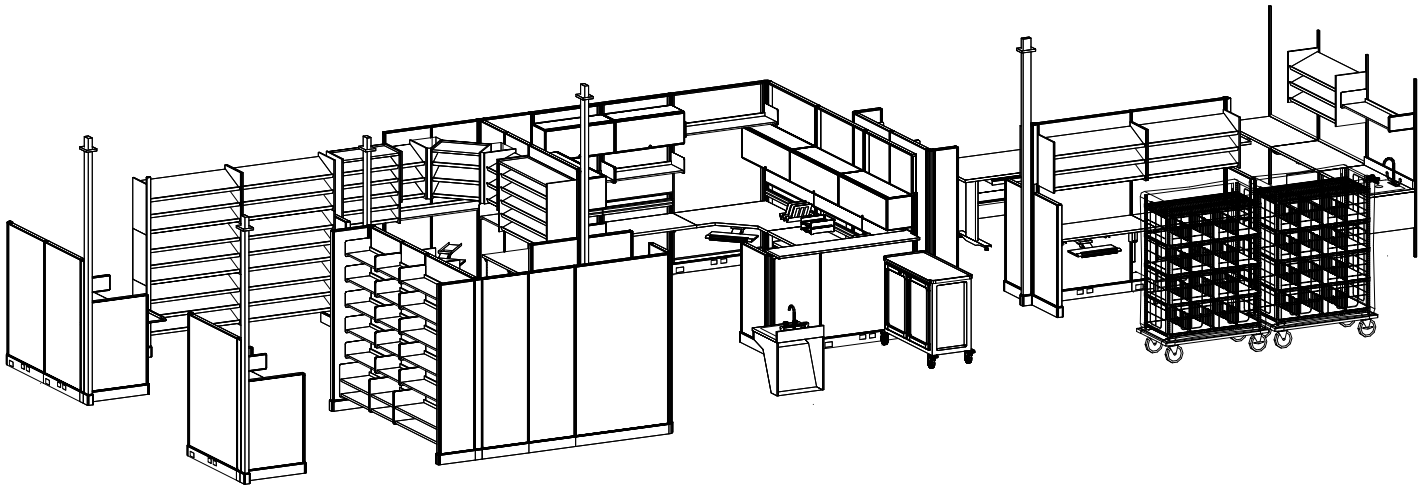

**MILITARY PHARMACY TYPICALS - MEDIUM VOLUME**

**COMPONENT LIST BY DEPARTMENT**

*E0677 UNIT DOSE/IV ADMIX*

| | |
|---|---|
| 1 | Panel,Hard Pwr 47”H (1194mm) x 24”W (610mm) |
| 1 | Panel,Hard Npwr 47”H (1194mm) x 24”W (610mm) |
| 4 | Panel,Hard Npwr 47”H (1194mm) x 30”W (762mm) |
| 1 | Panel,Hard Pwr 47”H (1194mm) x 48”W (1219mm) |
| 8 | Panel,Hard Npwr 53”H (1346mm) x 24”W (610mm) |
| 2 | Panel,Hard Pwr 67”H (1702mm) x 36”W (914mm) |
| 1 | Panel,Hard Pwr 67”H (1702mm) x 48”W (1219mm) |
| 2 | Panel,Hard Npwr 85”H (2159mm) x 12”W (305mm) |
| 4 | Panel,Hard Npwr 85”H (2159mm) x 18”W (457mm) |
| 6 | Panel,Hard Pwr 85”H (2159mm) x 24”W (610mm) |
| 2 | Panel,Hard Npwr 85”H (2159mm) x 24”W (160mm) |
| 1 | Panel,Hard Pwr 85”H (2159mm) x 30”W (762mm) |
| 1 | Panel,Hard Npwr 85”H (2159mm) x 30”W (762mm) |
| 2 | Panel,Hard Npwr 85”H (2159mm) x 36”W (914mm) |
| 4 | Panel,Hard Pwr 85”H (2159mm) x 48”W (2119mm) |
| 3 | Panel,Hard Npwr 85”H (2159mm) x 48”W (1219mm) |
| 2 | Open Panel Frame Pwr 85”H (2159mm) x 36”W (914mm) |
| 4 | Open Panel Frame Pwr 85”H (2159mm) x 48”W (1219mm) |
| 3 | Duplex Rcp, 6/Pkg |
| 2 | Duplex Rcp, Dedicated 6/Pkg |
| 2 | Ceiling Pwr Entry, Npwr 67”H (1702mm) |
| 3 | Ceiling Pwr Entry, Npwr 85”H (2159mm) |
| 1 | Wk Surf, Lam 24”D (610mm) x 24”W (610mm) |
| 3 | Wk Surf, Lam 24”D (610mm) x 48”W (1219mm) |
| 1 | Wk Surf, Lam 24”D (610mm) x 72”W (1829mm) |
| 2 | WK Surf, Corner, Lam 24"D (610mm) x 48"W (1219mm) |
| 1 | Trans Surf, Rect Lam Top 72”W (1829mm) |
| 11 | Shelf,Storage/Display 24”W (610mm) |
| 5 | Shelf,Storage/Display 30”W (762mm) |
| 18 | Shelf,Storage/Display 36”W (914mm) |
| 17 | Shelf,Storage/Display 48”W (1219mm) |
| 2 | Flip Dr Unit, Fab,W/Lock 36”W (914mm) |
| 4 | Flip Dr Unit, Fab,W/Lock 48”W (1219mm) |
| 2 | Tackboard, 36”W (914mm) |
| 3 | Tackboard, 48”W (1219mm) |
| 2 | Tool Bar, 36”W (914mm) |
| 3 | Tool Bar, 48”W (1219mm) |
| 4 | Wall Strip 84”H (2134mm) |
| 1 | Equip Rail, Wall-Mt, 48”W (1219mm) |
| 1 | Adapter Rail, 30”W (762mm) |
| 3 | Adapter Rail, 48”W (1219mm) |
| 1 | Work Surf,Hvy-Duty 24”D, With Supports (610mm) x 30”W (762mm) |
| 7 | Work Surf,Hvy-Duty 24”D, With Supports (610mm) x 48”W (1219mm) |
| 1 | Work Surf,Hvy-Duty 24”D, With Supports (610mm) x 72”W (1829mm) |
| 1 | Work Surf,Hvy-Duty 30”D, With Supports (762mm) x 48”W (1219mm) |
| 1 | Work Surf,Hvy-Duty 30”D, With Supports (762mm) x 72”W (1829mm) |

**MILITARY PHARMACY TYPICALS - MEDIUM VOLUME**

**COMPONENT LIST BY DEPARTMENT**

| | |
|---|---|
| 1 | Work Surf,Hvy-Duty Cor 24”D (610mm) x 48”W (1219mm) |
| 1 | Cant Sink-Adaptable Module 24”D (610mm) x 48”W (1219mm) |
| 4 | Shelf, 24”W (610mm) |
| 2 | Shelf, 30”W (762mm) |
| 6 | Shelf, 48”W (1219mm) |
| 2 | Table,Process w/Glides Adj Ht 36”D (914mm) x 72”W (1829mm) |
| 1 | Shelf Unit,3 Shlvs 24”W (610mm) |
| 12 | Shelf Unit,3 Shlvs 48”W (1219mm) |
| 1 | Shelf Unit,5 Shlvs 30”W (762mm) |
| 1 | Shelf Unit,5 Shlvs 48”W (1219mm) |
| 1 | Shelf Unit,Diagonal Cnr, 3 Shlvs |
| 2 | Shelf Unit,Add On, 15”W (381mm) |
| 1 | Shelf Unit,Add On, 24”W (610mm |
| 1 | Shelf Unit,Add On, 30”W (762mm) |
| 3 | Shelf Unit,Add On, 48”W (1219mm) |
| 4 | Storage Case W/3 Bottle Dwrs, W/Legs |
| 3 | Storage Case W/Shelf & Dwr W/Legs |
| 1 | ADA Sink Support, Wall Mounted, w/Corian Top, 24”D (610mm) x 24”W (610mm) |
| 5 | Storage Frame |
| 7 | Drw, 3”H (76mm) |
| 7 | Drw, 6”H (152mm) |
| 4 | Drw, 9”H (229mm) |
| 27 | Subcontainers 12/Pkg |
| 3 | Mobile Storage Cart W/Counter Top, Single, 24”W (610mm |
| 1 | Mobile Storage Cart W/Counter Top, Ext, 32”W (813mm) |
| 1 | Drawer Caddie w/Casters,W/O Drawers |
| 1 | Cart Body, Dbl-Wide,Top Spine, 2 Dwrs, 2 Wire Shelves Dbl Wide, Dbl Wide Solid Doors, 42”H (1067mm) |
| 2 | Cart, Mobile, 5 Wire Shelves, Wire Enclosures & Dividers, Cover, Dolly Frame 24”D (610mm) x 48”W (1219mm) |
| 2 | Eyewash |
| 2 | Ped, Mobile, Box/Box/File |
| 4 | Task Light, 30”W (762mm) |
| 9 | Task Light, 42”W (1067mm) |
| 2 | Paper Tray |
| 2 | Diag Tray |
| 6 | Keybd Tray,Fully Adj. W/Palm Rest |
| 1 | Sink and Faucet Assembly, |
| 1 | ADA Sink & Faucet Assy. |
| | Drawer Organizer Bins. |

*Connecting hardware required to complete the installation.

# E0685

## Military Pharm Typicals

### High Vol – Bulk Storage

Plan Scale: 1/8" = 1'

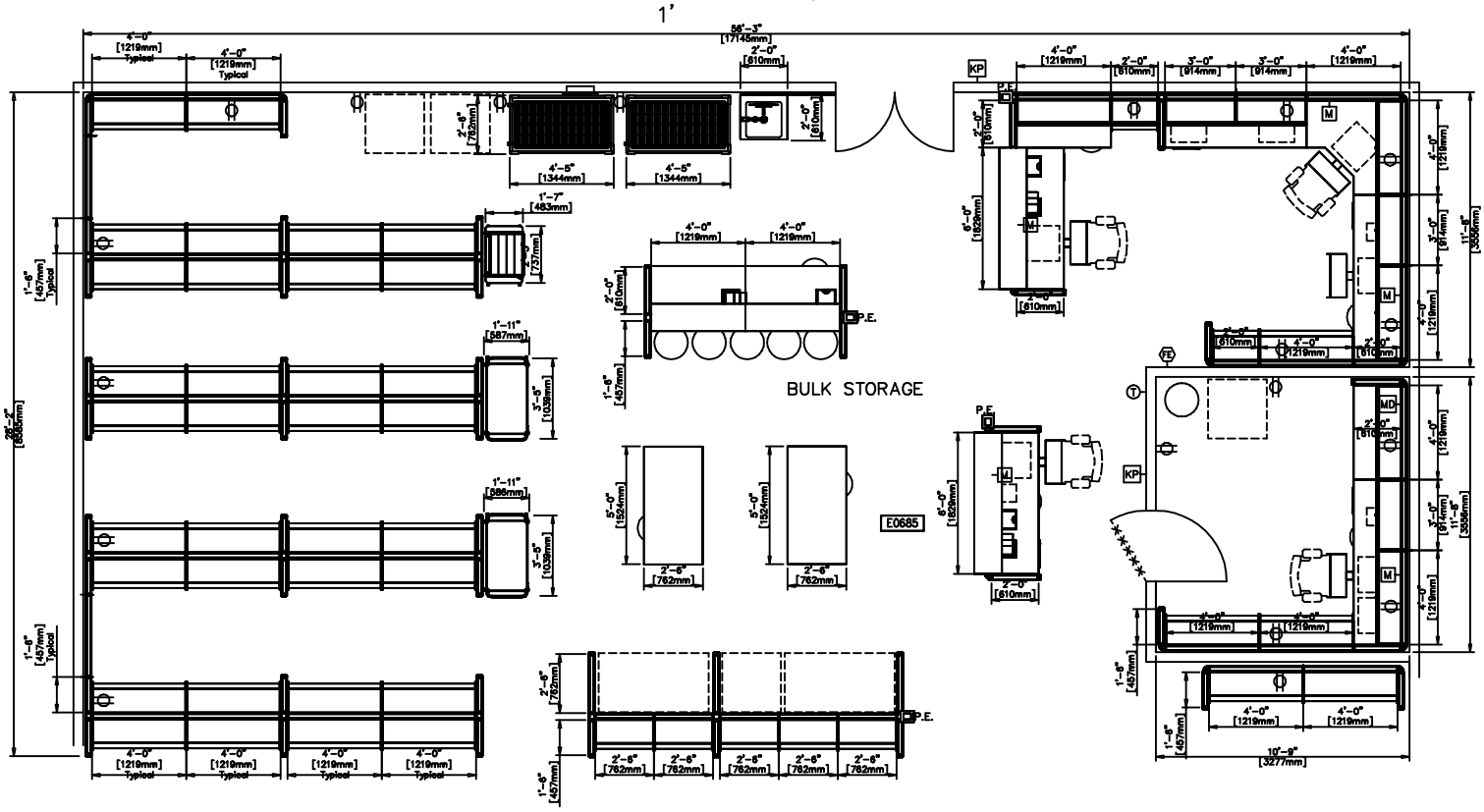


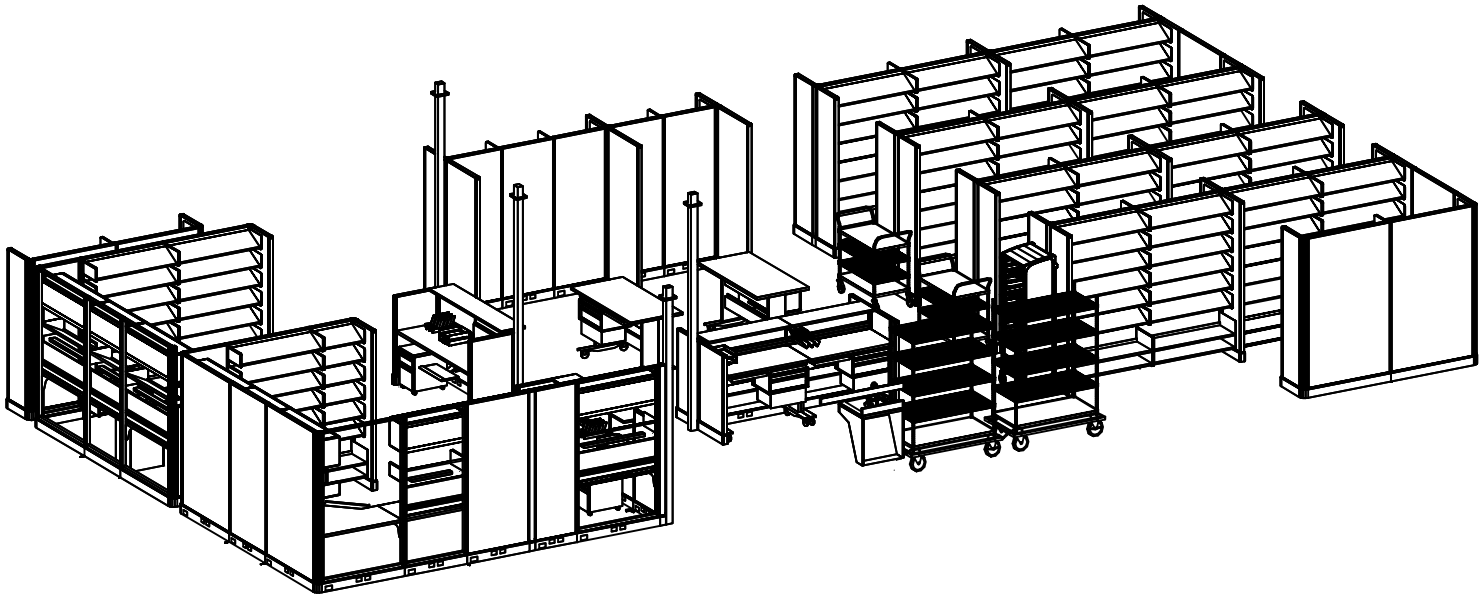

**COMPONENT LIST BY DEPARTMENT**

*E0685 BULK STORAGE*

| | |
|---|---|
| 2 | Panel,Hard Npwr, 47”H (1194mm) x 18”W (457mm) |
| 1 | Panel,Hard Pwr, 47”H (1194mm) x 24”W (610mm) |
| 5 | Panel,Hard Npwr, 47”H (1194mm) x 24”W (610mm) |
| 2 | Panel,Hard Pwr, W/Com Port, 47”H (1194mm) x 36”W (914mm) |
| 3 | Panel,Hard Pwr, W/Com Port, 47”H (1194mm) x 48”W (1219mm) |
| 1 | Panel,Hard Pwr, 53”H (1346mm) x 24”W (610mm) |
| 2 | Panel,Hard Npwr, 53”H (1346mm) x 24”W (610mm) |
| 33 | Panel,Hard Npwr, 85”H (2159mm) x 18”W (457mm) |
| 1 | Panel,Hard Pwr, 85”H (2159mm) x 24”W (610mm) |
| 2 | Panel,Hard Npwr, 85”H (2159mm) x 24”W (610mm) |
| 5 | Panel,Hard Pwr, 85”H (2159mm) x 30”W (762mm) |
| 3 | Panel,Hard Npwr, 85”H (2159mm) x 30”W (762mm) |
| 2 | Panel,Hard Pwr, 85”H (2159mm) x 36”W (914mm) |
| 2 | Panel,Hard Npwr, 85”H (2159mm) x 42”W (1067mm) |
| 2 | Panel,Hard Pwr, 85”H (2159mm) x 48”W (1219mm) |
| 23 | Panel, Hard Npwr, 85”H (2159mm) x 48”W (1219mm) |
| 1 | Open Panel Frame Npwr, 85”H (2159mm) x 24”W (610mm) |
| 1 | Open Panel Frame Pwr W/Com Port, 85”H 2159mm) x 36”W (914mm) |
| 1 | Open Panel Frame Npwr 85”H (2159mm) x 36”W (914mm) |
| 2 | Open Panel Frame Pwr W/Com Port, 85H (2159mm) x 48W (1219mm) |
| 2 | Open Panel Frame Npwr, 85”H (2159mm) x 48”W (1219mm) |
| 2 | Duplex Rcp, 6/Pkg |
| 2 | Duplex Rcp, Dedicated 6/Pkg |
| 2 | Ceiling Pwr Entry, Pwr 47”H (1194mm) |
| 2 | Ceiling Pwr Entry, Pwr 85”H (2159mm) |
| 2 | Wk Surf, Rect Lam, 24”D (610mm) x 48”W (1219mm) |
| 3 | Wk Surf, Rect Lam, 24”D (610mm) x 72”W (1829mm) |
| 2 | Wk Surf, Rect Lam, 24”D (610mm) x 84”W (2134mm) |
| 1 | Wk Surf, Cor Lam, 24”D (610mm) x 48”W (1219mm) |
| 2 | Trans Surf, Lam Top 48”W (1219mm) |
| 2 | Trans Surf, Lam Top 72”W (1829mm) |
| 2 | Shelf, 24”W (610mm) |
| 6 | Shelf,Storage/Display, 24”W (610mm) |
| 30 | Shelf,Storage/Display, 30”W (762mm) |
| 4 | Shelf,Storage/Display, 36”W (914mm) |
| 239 | Shelf,Storage/Display, 48”W (1219mm) |
| 2 | Flip Dr Unit, Fab, W/Lock, 24”W (610mm) |
| 4 | Flip Dr Unit, Fab, W/Lock, 36”W (914mm) |
| 5 | Flip Dr Unit, Fab, W/Lock, 48”W (1219mm) |
| 5 | Tackboard, 36”W (914mm) |
| 5 | Tackboard, 48”W (1219mm) |
| 1 | Tool Bar, 24”W (610mm) |
| 5 | Tool Bar, 36”W (914mm) |
| 8 | Tool Bar, 48”W (1219mm) |
| 1 | Equip Rail, Wall-Mt, 48”W (1219mm) |
| 1 | Sink Unit, ADA, w/Corian Top, 24”D (610mm) x 24”W (610mm) |
| 2 | Shelf, 24”W (610mm) |

**COMPONENT LIST BY DEPARTMENT**

| | |
|---|---|
| 10 | Shelf, 30”W (762mm) |
| 78 | Shelf, 48”W (1219mm) |
| 2 | Table,Process w/Casters Adj Ht 24”D (610mm) x 48”W (1219mm) |
| 2 | Table,Process w/Casters Adj Ht 30”D (762mm) x 60”W (1524mm) |
| 4 | Support Frame |
| 12 | Drw, 3”H (76mm) |
| 4 | Drw, 6”H (152mm) |
| 4 | Drw, 9”H (229mm) |
| 1 | Locker on Wheel Base W/O Lock,W/Door, 4 Wire Shelves, 2 6”H (152mm) Drw |
| 2 | Push Handle Wire Cart, 2 Wire Shelves, 2 Solid Shelves, Mobile, 21”D (533mm), 36”W (914mm) |
| 2 | Cart, Wire, 4 Wire Shelves, Solid Shelf, Dolly Frame, Mobile, 24”D (610mm), 48”W (1219mm) |
| 1 | Eyewash |
| 2 | Ped, Box/File |
| 1 | Ped, Box/Box/File |
| 2 | Ped, Stationary, File/File |
| 3 | Utility Tray,Ped |
| 4 | Task Light, 30”W (762mm) |
| 5 | Task Light, 42”W (1067mm) |
| 20 | Paper Tray |
| 9 | Diag Tray |
| 5 | Keybd Tray,Fully Adj |
| 1 | ADA Sink & Faucet Assy. |

*Connecting hardware required to complete the installation.

# E0686

## Military Pharm Typicals

### High Vol – Manuf & Prepack

Plan Scale: 1/4" = 1'

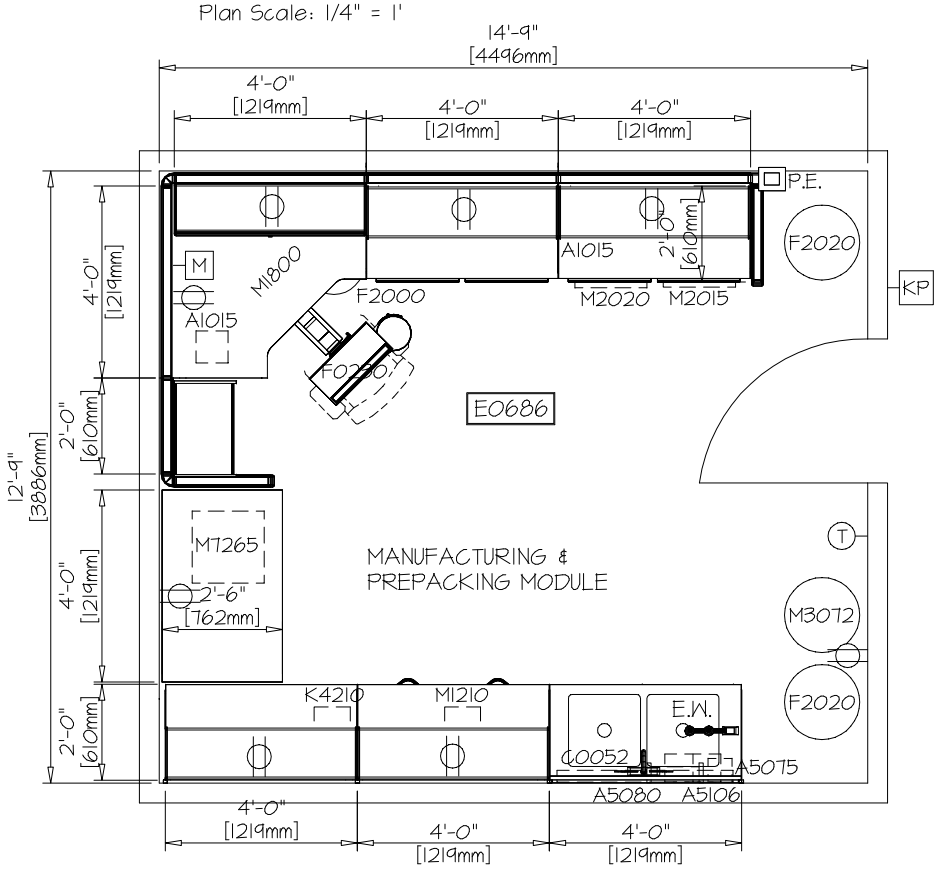


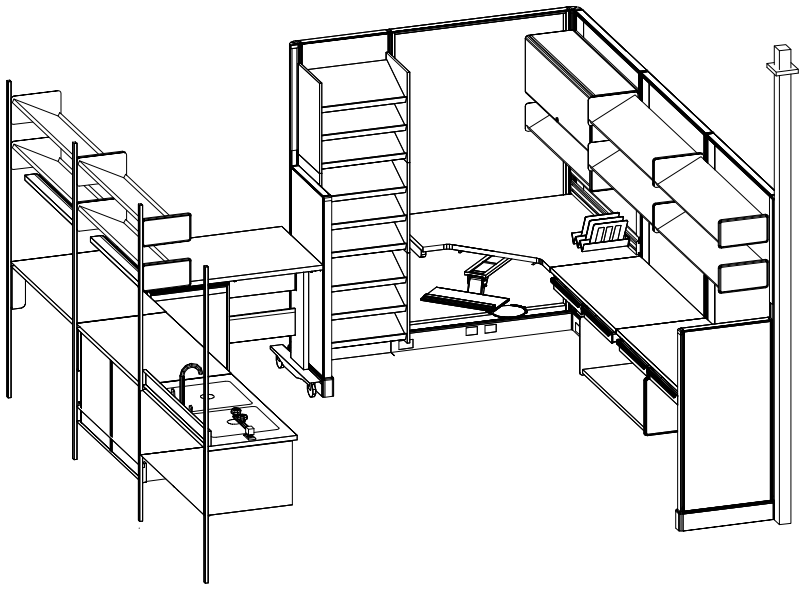

**COMPONENT LIST BY DEPARTMENT**

*E0686 MANUF & PREPACK*

2 Panel,Hard Npwr, 53”H (1346mm) x 24”W (610mm)
1 Panel,Hard Npwr, 85”H (2159mm) x 24”W (610mm)
4 Open Panel Frame Pwr, W/Com Port, 85”H (2159mm) x 48”W (1219mm)
1 Duplex Rcp, 6/Pkg
1 Duplex Rcp, Dedicated 6/Pkg
1 Ceiling Pwr Entry,Int Direct Conn,Pwr 85”H (2159mm)
9 Shelf, Storage/Display, 48”W (1219mm)
1 Flip Dr Unit, Fab, W/Lock, 48”W (1219mm)
1 Tackboard, 48”W (1219mm)
1 Tool Bar, 48”W (1219mm)
4 Wall Strip 84”H (2133mm)
1 Adapter Rail, 48”W (1219mm)
4 Work Surf,Hvy-Duty 24”D, With Supports (610mm) x 48”W (1219mm)
1 Work Surf,Hvy-Duty Cor 24”D (610mm) x 48”W (1219mm)
1 Cantilevered Sink Module, w/Corian Top, 24”D (610mm) x 48”W (1219mm)
1 Shelf, 48”W (1219mm)
1 Table,Process w/Casters Adj Ht 30”D (762mm) x 48”W (1219mm)
1 Storage Unit
3 Shelf Unit, 3 Shlvs 24”W (610mm)
1 Storage Case,3 Bottle Drws, W/Legs
1 Storage Case, W/Shelf, 5”H (127mm) Dwr, W/Legs
5 Drw, 3”H (76mm)
1 Dbl Sink and Faucet Assy
1 Eyewash
5 Task Light, 42”W (1067mm)
1 Diag Tray
1 Keybd Tray, Fully Adj

*Connecting hardware required to complete the installation.

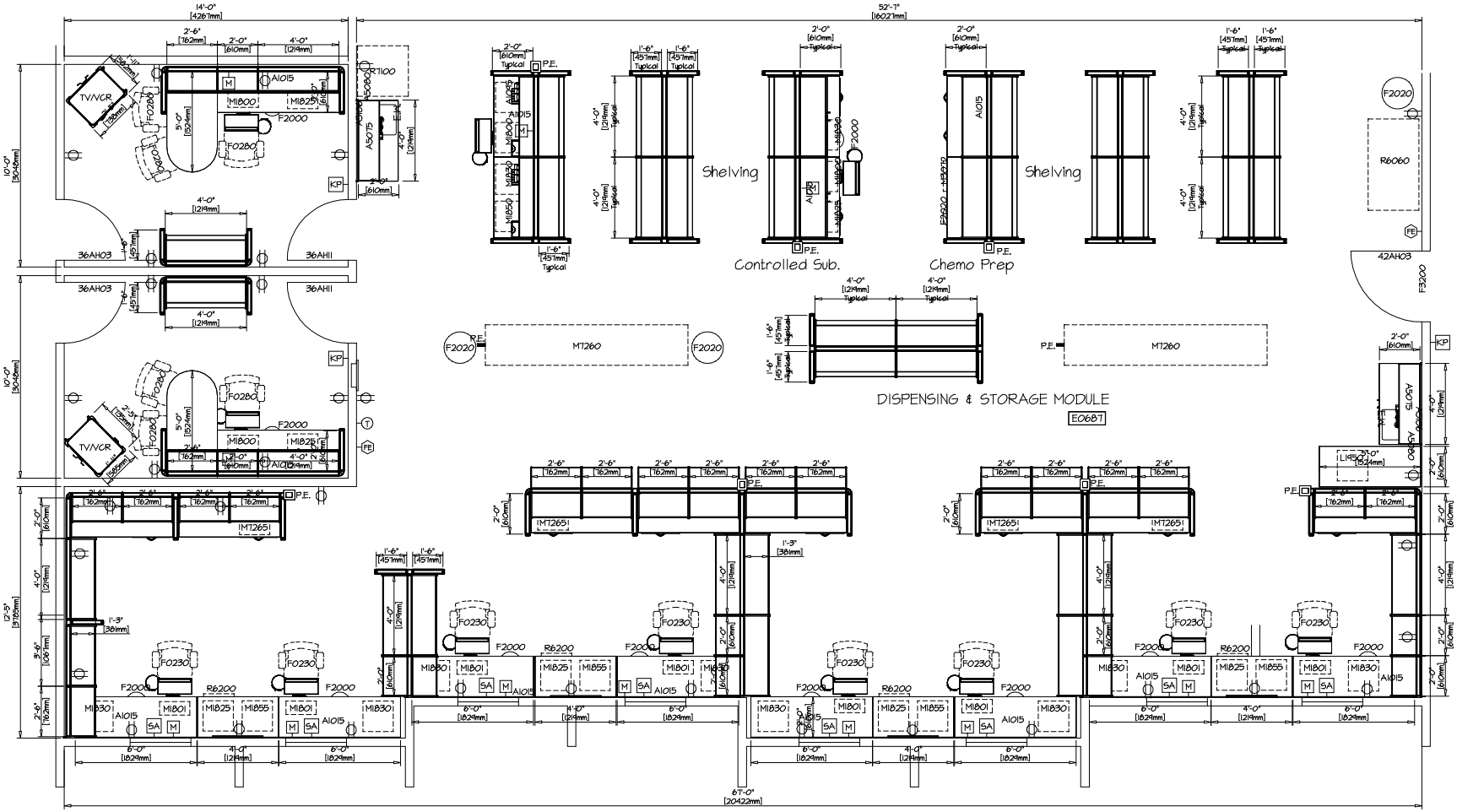


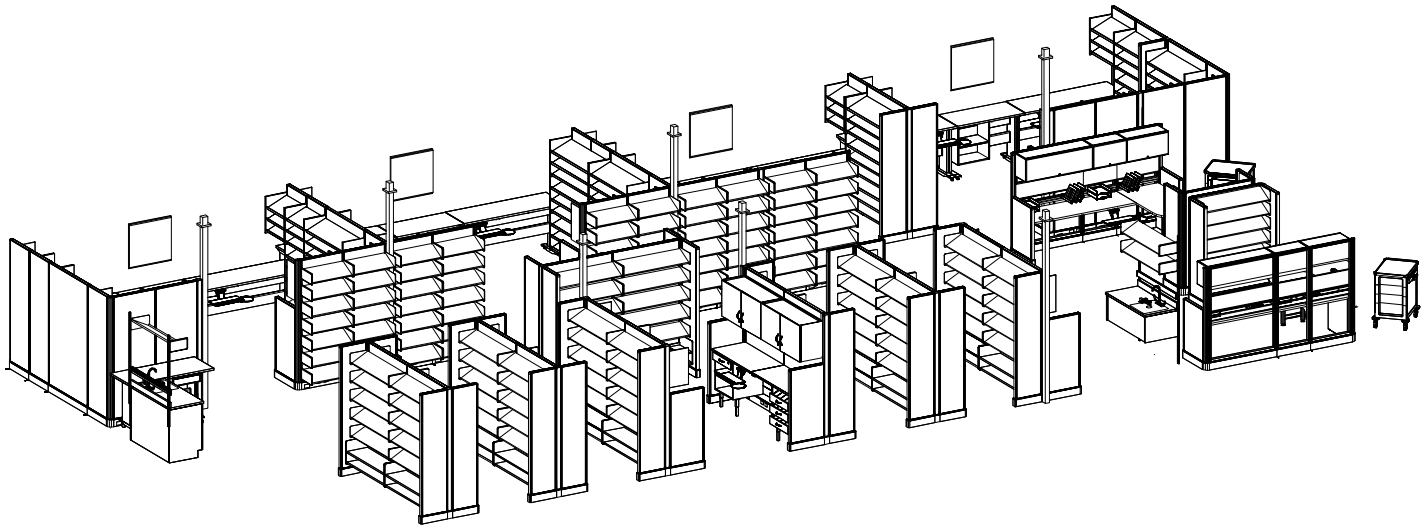

# E0687
## Military Pharm Typicals
### High Vol – Dispens & Storage

**COMPONENT LIST BY DEPARTMENT**

*E0687 DISPENS & STORAGE*

| | |
|---|---|
| 4 | Panel,Hard Npwr 39”H (991mm) x 24”W 610mm) |
| 14 | Panel,Hard Npwr 53”H (1346mm) x 24”W (610mm) |
| 4 | Panel,Hard Npwr 67”H (1702mm) x 18”W (457mm) |
| 2 | Panel,Hard Npwr 67”H (1702mm) x 48”W (1219mm) |
| 25 | Panel,Hard Npwr 85”H (2159mm) x 18”W (457mm) |
| 1 | Panel,Hard Pwr 85”H (2159mm) x 24”W (610mm) |
| 10 | Panel,Hard Npwr 85”H (2159mm) x 24”W (610mm) |
| 16 | Panel,Hard Pwr 85”H (2159mm) x 30”W (762mm) |
| 1 | Panel,Hard Npwr 85”H (2159mm) x 30”W (762mm) |
| 1 | Panel,Hard Npwr 85”H (2159mm) x 36”W (914mm) |
| 6 | Panel,Hard Pwr 85”H (2159mm) x 48”W (1219mm) |
| 13 | Panel,Hard Npwr 85”H (2159mm) x 48”W (1219mm) |
| 2 | Open Panel Frame Npwr 67”H (1346mm) x 24”W (610mm) |
| 2 | Open Panel Frame Npwr 67”H (1346mm) x 30”W (762mm) |
| 2 | Open Panel Frame Npwr 67”H (1346mm) x 48”W (1219mm) |
| 2 | Duplex Rcp, 6/Pkg |
| 2 | Duplex Rcp, Dedicated 6/Pkg |
| 7 | Ceiling Pwr Entry,Int Direct Conn,Pwr 85”H (2159mm) |
| 2 | Wk Surf, Rect Lam 24”D (610mm) x 72”W (1829mm) |
| 2 | Penin, Round-End Lam 30”D (762mm) x 60”W (1524mm) |
| 2 | Support Panel,Wk Surf,End Lam 24”D (610mm) |
| 70 | Shelf,Storage/Display, 30”W (762mm) |
| 123 | Shelf,Storage/Display, 48”W (1219mm) |
| 2 | Flip Dr Unit, Fab,W/Lock, 24”W (610mm) |
| 2 | Flip Dr Unit, Fab,W/Lock, 30”W (762mm) |
| 2 | Flip Dr Unit, Fab,W/Lock, 48”W (1219mm) |
| 2 | Tackboard, 24”W (610mm) |
| 2 | Tackboard, 30”W (762mm) |
| 4 | Tackboard, 48”W (1219mm) |
| 4 | Tackboard, 30”H (762mm) x 30W (762mm) |
| 2 | Tool Bar, 24”W (610mm) |
| 2 | Tool Bar, 30”W (762mm) |
| 4 | Tool Bar, 48”W (1219mm) |
| 2 | Wall Strip 60”H (1524mm) |
| 2 | Wall Strip 84”H (2134mm) |
| 3 | Equip Rail,Wall-Mt,48”W (1219mm) |
| 8 | Adapter Rail,30”W (762mm) |
| 3 | Adapter Rail,48”W (1219mm) |
| 6 | Work Surf,Hvy-Duty 24”D, With Supports (610mm) x 48”W (1219mm) |
| 8 | Work Surf,Hvy-Duty 24”D, With Supports (610mm) x 60”W (1524mm) |
| 1 | Cantilevered Sink Module, w/Corian Top, 24”D (610mm) x 48”W (1219mm) |
| 48 | Shelf, 48”W (1219mm) |
| 4 | Table,Process w/Glides Adj Ht 24”D (610mm) x 48”W (1219mm) |
| 8 | Table,Process w/Glides Adj Ht 24”D (610mm) x 72”W (1829mm) |
| 1 | Table,Process w/Casters Adj Ht 24”D (610mm) x 60”W (1524mm) |
| 4 | Storage Unit W/Shelf |
| 2 | Shelf Unit,3 Shlvs,9”H (229mm) x 48”W (1219mm) |
| 16 | Shelf Unit,3 Shlvs, 16”D (406mm) x 24”W (610mm) |

**COMPONENT LIST BY DEPARTMENT**

| | |
|---|---|
| 17 | Shelf Unit,3 Shlvs, 16”D (406mm) x 30”W (762mm) |
| 3 | Shelf Unit,3 Shlvs, 16”D (406mm) x 36”W (914mm) |
| 32 | Shelf Unit,3 Shlvs, 16”D (406mm) x 48”W (914mm) |
| 2 | Shelf Unit, W/Dbl Drs, 16”D (406mm) x 48”W (1219mm) |
| 10 | Storage Case, W/3 Bolltle Dwrs, W/Legs |
| 2 | Storage Case, W/Shelf, W/5”H (127mm) Dwr, W/Legs |
| 1 | Wk Surf w/Backsplash 24”D (610mm) x 48”W (1219mm) |
| 1 | Snk Base Cbt, W/Dbl Dr,1 Shf 36”H (914mm) x 24”D (610mm) x 48””W (1219mm) |
| 1 | Drw, 6”H (152mm) |
| 2 | Cart,Flat Top, 2 6”H (152mm) Dwrs, 2 Wire Shelves, Solid Door, Cord Wrap, Accy. Rail, 36”H (914mm) |
| 2 | Eyewash |
| 16 | Task Light, 30”W (762mm) |
| 12 | Paper Tray |
| 6 | Diag Tray |
| 12 | Keybd Tray,Fully Adj.W.S. |
| 2 | CPU Holder,Vertical |
| 2 | Sink and Faucet Assembly, Sink |

*Connecting hardware required to complete the installation.

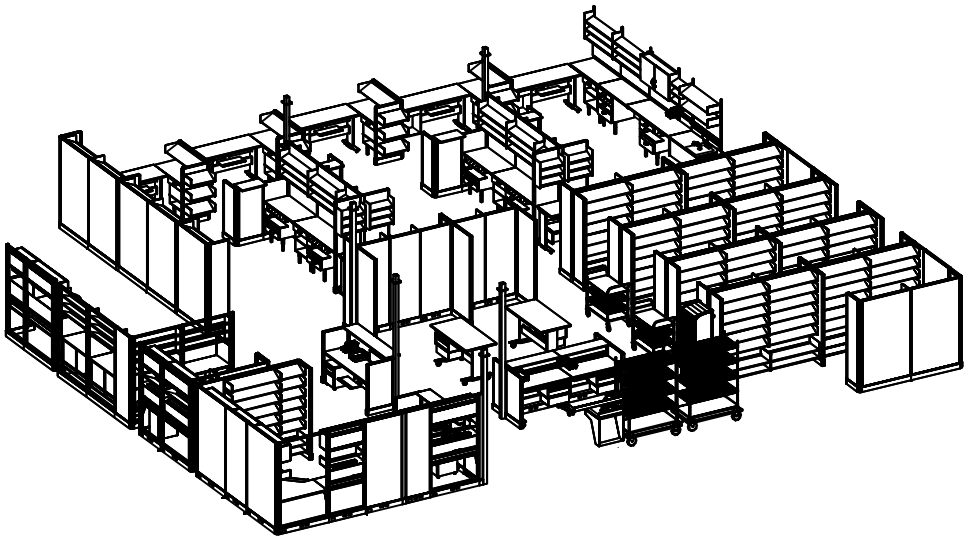

# E0688

## Military Pharm Typicals

### High Vol – Offiste Sat Pharm

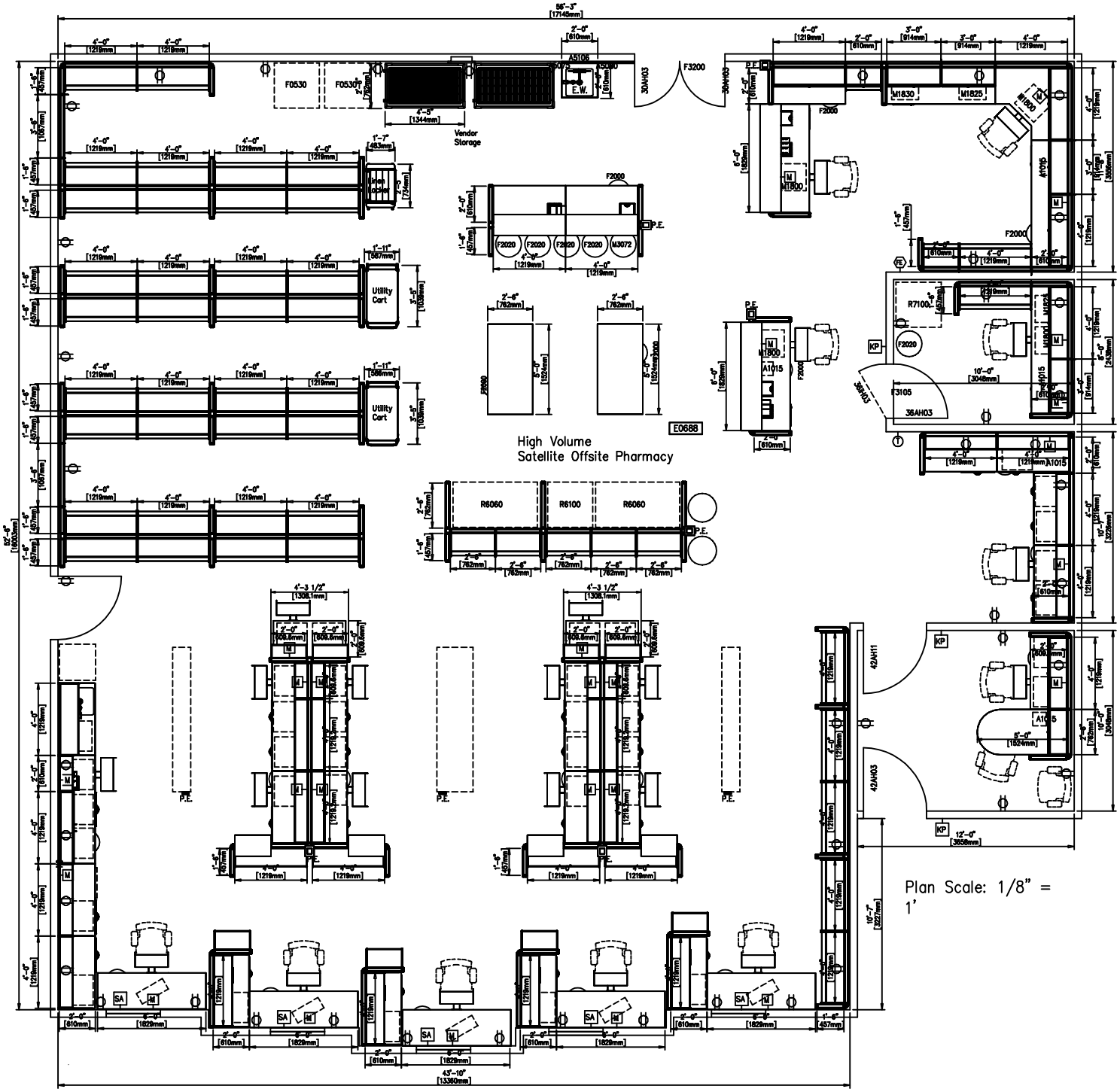

**COMPONENT LIST BY DEPARTMENT**

*E0688 OFFSITE SAT. PHARM.*

| | |
|---|---|
| 2 | Panel,Hard Npwr 47”H (1194mm) x 18”W (457mm) |
| 1 | Panel,Hard Pwr 47”H (1194mm) x 24”W (610mm) |
| 5 | Panel,Hard Npwr 47”H (1194mm) x 24”W (610mm) |
| 2 | Panel,Hard Pwr 47”H (1194mm) x 36”W (914mm) |
| 3 | Panel,Hard Pwr 47”H (1194mm) x 48”W (1219mm) |
| 4 | Panel,Hard Npwr 53”H (1346mm) x 18”W (457mm) |
| 1 | Panel,Hard Pwr 53”H (1346mm) x 24”W (610mm) |
| 18 | Panel,Hard Npwr 53”H (1346mm) x 24”W (610mm) |
| 4 | Panel,Hard Npwr 53”H (1346mm) x 48”W (1219mm) |
| 35 | Panel,Hard Npwr 85”H (2159mm) x 18”W (457mm) |
| 8 | Panel,Hard Pwr 85”H (2159mm) x 24”W (610mm) |
| 2 | Panel,Hard Npwr 85”H (2159mm) x 24”W (610mm) |
| 5 | Panel,Hard Pwr 85”H (2159mm) x 30”W (762mm) |
| 3 | Panel,Hard Npwr 85”H (2159mm) x 30”W (762mm) |
| 2 | Panel,Hard Pwr 85”H (2159mm) x 36”W (914mm) |
| 2 | Panel,Hard Npwr 85”H (2159mm) x 42”W (1069mm) |
| 6 | Panel,Hard Pwr 85”H (2159mm) x 48”W (1219mm) |
| 25 | Panel,Hard Npwr 85”H (2159mm) x 48”W (1219mm) |
| 1 | Open Panel Frame Pwr 85”H (2159mm) x 24”W (610mm) |
| 1 | Open Panel Frame Npwr 85”H (2159mm) x 30”W (762mm) |
| 2 | Open Panel Frame Pwr 85”H (2159mm) x 36”W (914mm) |
| 3 | Open Panel Frame Pwr 85”H (2159mm) x 48”W (1219mm) |
| 5 | Open Panel Frame Npwr 85”H (2159mm) x 48”W (1219mm) |
| 2 | Duplex Rcp, 6/Pkg |
| 1 | Duplex Rcp, Dedicated 6/Pkg |
| 2 | Ceiling Pwr Entry,Int Direct Conn,Pwr 47”H (1194mm) |
| 4 | Ceiling Pwr Entry,Int Direct Conn,Pwr 85”H (2159mm) |
| 2 | Wk Surf,Sq-Edge Rect Lam 24”D (610mm) x 48”W (1219mm) |
| 3 | Wk Surf,Sq-Edge Rect Lam 24”D (610mm) x 72”W (1829mm) |
| 2 | Wk Surf,Sq-Edge Rect Lam 24”D (610mm) x 84”W (2134mm) |
| 1 | Wk Surf,Sq-Edge Cor Lam 24”D (610mm) x 48”W (1219mm) |
| 1 | Penin,Sq-Edge Round-End Lam 30”D (762mm) x 60”W (1524mm) |
| 4 | Trans Surf,Sq-Edge Rect Lam Top 24”W (610mm) |
| 2 | Trans Surf,Sq-Edge Rect Lam Top 48”W (1219mm) |
| 2 | Trans Surf,Sq-Edge Rect Lam Top 72”W (1829mm) |
| 2 | Shelf, 24”W (610mm) |
| 18 | Shelf,Storage/Display 24”W (610mm) |
| 30 | Shelf,Storage/Display 30”W (762mm) |
| 4 | Shelf,Storage/Display 36”W (914mm) |
| 268 | Shelf,Storage/Display 48”W (1219mm) |
| 2 | Flip Dr Unit, Fab,W/Lock 24”W (610mm) |
| 1 | Flip Dr Unit, Fab,W/Lock 30”W (914mm) |
| 4 | Flip Dr Unit, Fab,W/Lock 36”W (914mm) |
| 5 | Flip Dr Unit, Fab,W/Lock 48”W (1219mm) |
| 5 | Tackboard, 36”W (914mm) |
| 1 | Tackboard, 30”W (762mm) |
| 8 | Tackboard, 48”W (1219mm) |

**COMPONENT LIST BY DEPARTMENT**

| | |
|---|---|
| 2 | Tool Bar, 24”W (610mm) |
| 1 | Tool Bar, 30”W (762mm) |
| 5 | Tool Bar, 36”W (914mm) |
| 12 | Tool Bar, 48”W (1219mm) |
| 6 | Wall Strip 84”H (2134mm) |
| 2 | Equip Rail,Wall-Mt,48”W (1219mm) |
| 19 | Adapter Rail,48”W (1219mm) |
| 14 | Work Surf,Hvy-Duty 24”D, With Supports (610mm) x 48”W (1219mm) |
| 5 | Work Surf,Hvy-Duty 24”D, With Supports (610mm) x 72”W (1829mm) |
| 1 | Cantilevered Sink Module, w/Corian Top, 24”D (610mm) x 48”W (1219mm) |
| 1 | Cantilevered Sink Module, ADA, w/Corian Top, 24”D (610mm) x 24”W (610mm) |
| 2 | Shelf, 24”W (610mm) |
| 10 | Shelf, 30”W (762mm) |
| 82 | Shelf, 48”W (1219mm) |
| 2 | Table,Process w/Glides Adj Ht 24”D (610mm) x 48”W (1219mm) |
| 5 | Table,Process w/Glides Adj Ht 24”D (610mm) x 72”W (1829mm) |
| 2 | Table,Process w/Casters Adj Ht 24”D (610mm) x 48”W (1219mm) |
| 2 | Table,Process w/Casters Adj Ht 30”D (762mm) x 60”W (1524mm) |
| 5 | Storage Unit |
| 9 | Shelf Unit,3 Shlvs and 24”H (610mm) x 9”D (229mm) x 24”W (610mm) |
| 15 | Shelf Unit,3 Shlvs and 24”H (610mm) x 9”D (229mm) x 48”W (1219mm) |
| 1 | Shelf Unit,Add On, 9”D (610mm) x 46 ¾”W (1187mm) |
| 1 | Shelf Unit,Back Panel 24”H (610mm) x 46 ¾”W (1187mm) |
| 1 | Shelf Unit,Dbl Drs, 24”H (610mm) x 48”W (1219mm) |
| 11 | Storage Case, W/Legs, 3 Bottle Dwr |
| 11 | Storage Case, W/Legs, Dwr, Shelf |
| 1 | Storage Case, W/Legs, Dwr, 5”H (127mm) Bottle Dwr, 7 ½”H (191mm) Bottle Dwr |
| 1 | Storage Case, W/Legs, 2 7 ½”H (192mm) Dwr, 2 5”H (127mm)Dwr |
| 2 | Lid for Storage Frame |
| 6 | Storage Frame |
| 14 | Drw, 3”H (76mm) |
| 9 | Drw, 6”H (152mm) |
| 6 | Drw, 9”H (229mm) |
| 1 | Locker on Wheel Base W/O Lock,W/Door, 4 Wire Shelves, 2 6”H (152mm) Dwrs, Dwr Organizer Bins |
| 2 | Cart, Wire, Dolly Frame, Mobile, 4 Wire Shelves, Solid Shelf, 24D (610mm) x 48W (1219mm) |
| 2 | Cart, Wire, W/Push Handle, 2 Wire Shelves, 2 Solid Shelves, Mobile, 21”D (533mm) x 36”W (914mm) |
| 2 | Eyewash |
| 2 | Ped, Mobile Box/File |
| 1 | Ped, Mobile Box/Box/File |
| 2 | Ped, Stationary File/File |
| 3 | Utility Tray,Ped |
| 5 | Task Light, 30W (762mm) |
| 5 | Task Light, 42W (1069mm) |
| 28 | Paper Tray |
| 10 | Diag Tray |
| 6 | Shelf Div 8/Pkg |

| | |
|---|---|
| 22 | Keybd Tray,Fully Adj. . |
| 1 | Sink and Faucet Assembly |
| 1 | ADA Sink & Faucet Assy. |

*Connecting hardware required to complete the installation.

# E0689

## Military Pharm Typicals

### High Vol – Unit Dose/IV Admix

Plan Scale: 1/8" = 1'

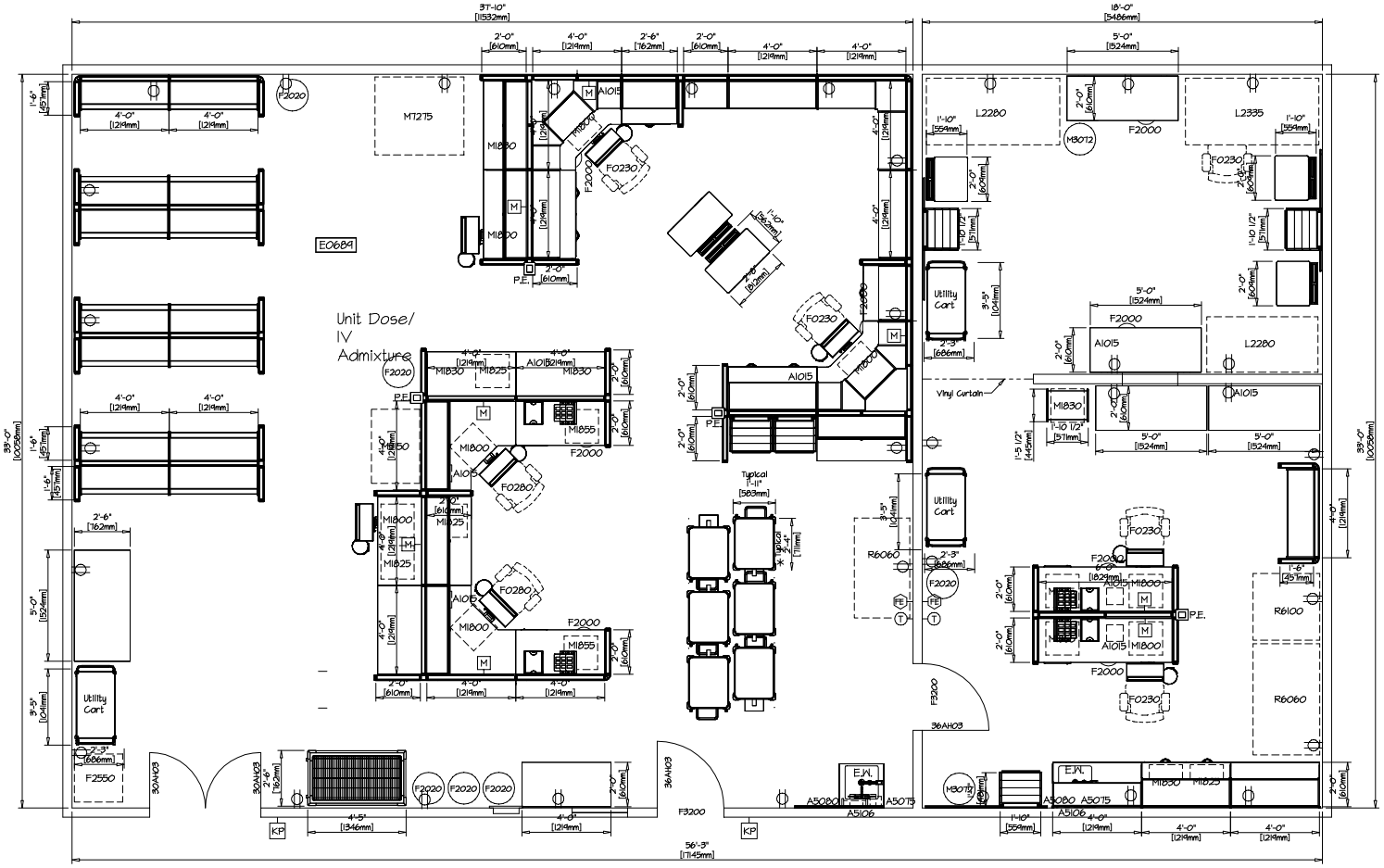


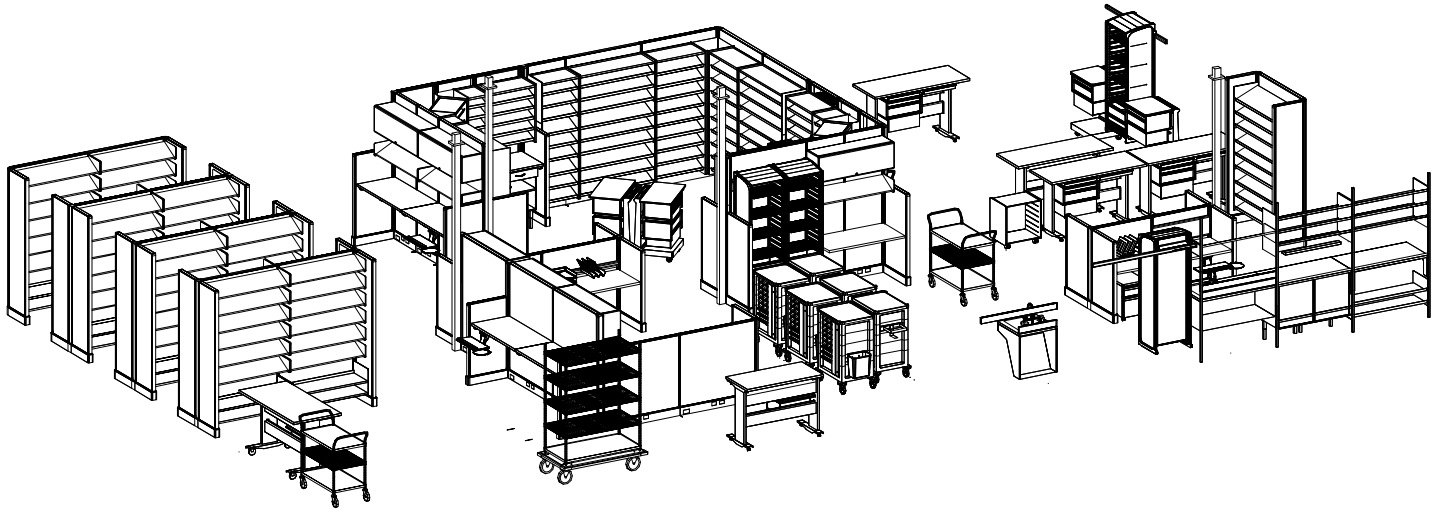

**MILITARY PHARMACY TYPICALS - HIGH VOLUME**

**COMPONENT LIST BY DEPARTMENT**

*E0689 UNIT_IV*

| | |
|---|---|
| 11 | Panel,Hard Npwr 47”H (1194mm) X 24”W (610mm) |
| 2 | Panel,Hard Pwr 47”H (1194mm) x 36”W (914mm) |
| 4 | Panel,Hard Pwr W/Com Port 47”H (1194mm) x 48”W (1219mm) |
| 8 | Panel,Hard Npwr 53”H (1346mm) x 24”W (610mm) |
| 3 | Panel,Hard Pwr 67”H (1702mm) x 48”W (1219mm) |
| 16 | Panel,Hard Npwr 85”H (2159mm) x 18”W (457mm) |
| 4 | Panel,Hard Pwr 85”H (2159mm) x 24”W (610mm) |
| 1 | Panel,Hard Npwr 85”H (2159mm) x 24”W (610mm) |
| 2 | Panel,Hard Pwr 85”H (2159mm) x 48”W (1219mm) |
| 13 | Panel,Hard Npwr 85”H (2159mm) x 48”W (1219mm) |
| 4 | Open Panel Frame Npwr 85”H (2159mm) x 24”W (610mm) |
| 2 | Open Panel Frame Npwr 85”H (2159mm) x 30”W (762mm) |
| 3 | Duplex Rcp, 6/Pkg |
| 1 | Duplex Rcp, Dedicated 6/Pkg |
| 1 | Ceiling Pwr Entry,Int Direct Conn,Pwr 47”H (1194mm) |
| 1 | Ceiling Pwr Entry,Int Direct Conn,Npwr 67”H (1702mm) |
| 2 | Ceiling Pwr Entry,Int Direct Conn,Pwr 85”H (2159mm) |
| 4 | Wk Surf, Rect Lam 24”D (610mm) x 48”W (1219mm) |
| 2 | Wk Surf, Rect Lam 24”D (610mm) x 72”W (1829mm) |
| 2 | Wk Surf, Cor Lam 24”D (610mm) x 48”W (1219mm) |
| 2 | Shelf,Storage/Display 24” (610mm) |
| 90 | Shelf,Storage/Display 48”W (1219mm) |
| 6 | Flip Dr Unit, Fab,W/Lock 48”W (1219mm) |
| 2 | Tackboard, 36”W (914mm) |
| 3 | Tackboard, 48”W (1219mm) |
| 2 | Tool Bar, 36”W (914mm) |
| 2 | Tool Bar, 48”W (1219mm) |
| 4 | Wall Strip 84”H (2134mm) |
| 2 | Equip Rail,Wall-Mt,48”W (1219mm) |
| 2 | Adapter Rail,30”W (762mm) |
| 4 | Adapter Rail,48”W (1219mm) |
| 2 | Work Surf,Hvy-Duty 24”D (610mm) x 30”W (762mm) |
| 10 | Work Surf,Hvy-Duty 24”D (610mm) x 48”W (1219mm) |
| 2 | Work Surf,Hvy-Duty Cor 24”D (610mm) x 48”W (1219mm) |
| 30 | Shelf, 16”D (406mm), 48”W (1219mm) |
| 6 | Table,Process w/Glides Adj Ht 24”D (610mm) x 48”W (1219mm) |
| 5 | Table,Process w/Glides Adj Ht 24”D (610mm) x 60”W (1524mm) |
| 1 | Table,Process w/Casters Adj Ht 30”D (762mm) x 60”W (1524mm) |
| 3 | Shelf Unit,3 Shlvs and 24”H (610mm) x 16”D (406mm) x 24”W (610mm) |
| 11 | Shelf Unit,3 Shlvs and 24”H (610mm) x 16”D (406mm) x 48”W (1219mm) |
| 2 | Shelf Unit,5 Shlvs and 34”H (864mm) x 16”D (406mm) x 30”W (762mm) |
| 2 | Shelf Unit,5 Shlvs and 34”H (864mm) x 16”D (406mm) x 48”W (1219mm) |
| 2 | Shelf Unit,Diagonal Cnr, 5 Shlvs and 34”H (864mm) |
| 1 | Shelf Unit, 90 deg Cnr |
| 4 | Shelf Unit,Add On, 16”D (406mm), 13 ½”W (343mm) |
| 5 | Shelf Unit,Add On, 16”D (406mm), 22 ¾”W (578mm) |
| 2 | Shelf Unit,Add On, 16”D (406mm), 28 ¾”W (730mm) |

**MILITARY PHARMACY TYPICALS - HIGH VOLUME**

**COMPONENT LIST BY DEPARTMENT**

| | |
|---|---|
| 2 | Shelf Unit,Add On, 16”D (406mm), 30 ½”W (775mm) |
| 4 | Shelf Unit,Add On, 16”D (406mm), 46 ¾”W (1187mm) |
| 13 | Storage Case, W/ Dwrs |
| 1 | Sink Module, w/Corian Top, 24”D (610mm) x 48”W (1219mm) |
| 1 | Sink Module, ADA, w/Corian Top, 24”D (610mm) x 24”W (610mm) |
| 5 | Storage Case, W/Legs, 3 Bottle Dwr |
| 3 | Storage Case, W/Legs, Dwr,Shelf |
| 8 | Storage Frame |
| 20 | Drw, 3”H (76mm) |
| 8 | Drw, 6”H (152mm) |
| 6 | Drw, 9”H (229mm) |
| 5 | L Cart, Mobile, W/Top, Storage Frame, 3”H (76mm) Dwr, 6”H (152mm) Dwr, 9”H (229mm) Dwr, Dwr Organizer Bins |
| 2 | Rail Assy,Std 144”W (3658mm) |
| 5 | Locker W/Door, 4 Wire Shelves, 2 6”H (152mm) Dwrs |
| 1 | Drawer Caddie w/Casters,W/O Drawers |
| 6 | Cart ,Raised Edge Top, 2 3”H (76mm) Dwr, 6”H (152mm) Dwr W/Lock Lid, 3 8-Bin Cassettes, Wastebasket, Sharps Container, 2 Accy. Mounting Rails, Dwr Organizer Bins, Lock Bar, 42H (1067mm) |
| 1 | Cart, Wire, Dolly Frame, Mobile, 4 Wire Shelves, Solid Shelf, 24”D (610mm) x 48”W (1219mm) |
| 3 | Cart, Wire, W/Push Handle, Wire Shelf, 2 Solid Shelves, Mobile, 21”D (533mm) x 36”W (914mm) |
| 2 | Eyewash |
| 4 | Ped, Mobile Box/File |
| 4 | Utility Tray,Ped |
| 7 | Task Light, 42”W (1069mm) |
| 8 | Paper Tray |
| 4 | Diag Tray |
| 8 | Keybd Tray,Fully Adj. |
| 1 | CPU Holder,Vertical |
| 1 | Sink and Faucet Assembly |
| 1 | ADA Sink & Faucet Assy. |

*Connecting hardware required to complete the installation.