Prices effective July 5, 2023

Published March 2024

Canvas Office Landscape®

Dock

Introduction	**page 2**
Canvas Office Landscape Dock	**3**
Infrastructure	5
Energy Distribution	18
Work Surfaces	42
Supports and Hardware	59
Cable Management	77
Storage	83
Screens	93
Indices	**161**
By Name	161
By Number	163
Appendices	
20-Day or Less/Assigned Lead-Time Order Information	
Stain-to-Match Program	
Customer's Own Material Order Information-Workspaces	
Textiles Application Chart-Workspaces	
Textile Colors	

For the latest materials information, refer to the Materials pages on HermanMiller.com.

Introduction

A Note on the Organization of This Book

There are a few signals that will help you understand the organization of this book. Once you know them, you should be able to find your way around easily.

Like a newspaper, this book is formatted with columns of text and illustrations that run vertically.

Information wraps from one column to the next and continues for as many pages as it needs to.

Black bars are clues.

A black bar at the top of a page signals the start of information about a product.

This information is divided into two sections, each signaled by a black bar. Product Information includes a description, additional notes, and dimensional drawings. Specification Information, which always begins at the top of a column, includes a series of steps. Each step represents a decision you need to make in order to complete your product number. Steps must be followed sequentially. The number of pages needed to complete information on a product varies; some will be complete in one page; others may fill three or four pages. Just continue going through the steps until you run into the next product, signaled by the black bar at the top of the page.

Black tabs running along the outside edge of the page help you locate what section you are in or what section you want to go to. You can thumb forwards or backwards to find a section; tabs and text appear on both sides of the page.

The additional pages in the back of the book include the appendices and indices. They are signaled by a long black bar running along the outside edge of the page.

The index is presented two ways.

The first index is in alphabetical order by product name. It can be helpful if you are new to the products and numbering scheme or if you are looking for a type of product, such as work chair or round table.

The second index is by product number. It lists, in alphanumeric order, the base product number, typically a five-digit number.

This book is effective July 5, 2023, subject to change without notice. Products may be purchased from authorized Herman Miller dealers who will quote prices upon request. For more information about our products and services or to see a list of dealers, visit www.HermanMiller.com.

All prices are list prices in US Dollars. Additional services, such as planning services, design, storage, and installation, are not included and must be added to these prices when the additional services are requested.

Illustrations, specifications, and prices are based on the latest information at the time of publication. The right is reserved to make changes at any time without notice in prices, fabrics, finishes, materials, specifications, and models, and also to discontinue models and finishes.

Dimensions shown in the drawings are engineering drawing dimensions rounded up to the nearest 1/8". Product is shipped set up or knocked down. Products that include "Shipped knocked down" in the description require some assembly. If this statement does not appear in the description, the product is shipped assembled.

Service problems are normally handled by a Herman Miller authorized dealer. Where this cannot be accomplished on a local level, service problems should be referred to the Customer Care Representative for your region, Herman Miller, Inc., Zeeland, Michigan 49464.

20-Day or Less/Assigned Lead-Time Shipments

All products and options in this price book not designated by an Assigned Program icon A will ship in **20 business days or less** after being acknowledged by Herman Miller.

Products and options designated by an A are on the assigned lead- time program and may ship in 20 days, less than 20 days, or more than 20 days from order acknowledgement.

Infrastructure

Energy Distribution

Work Surfaces

Supports and Hardware

Cable Management

Storage

Screens

Dock Structure FD110.

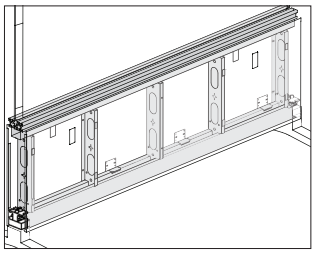

Product Information

Description

This structural steel wall defines space and channels power and data to the user. Includes 18 1/8″-high frame and top rail. Top rail finish is clear anodized aluminum.

Notes

When finished with cladding, dock structure is 3″ thick.

Dock is raised 4″ from the floor.

Power can enter from bottom opening using floor power entry (FD144.) or from end of dock with ceiling power entry (FD142.), ordered separately.

Order the following products separately:

- Lower cladding (FD170.)
- Dock foot (FD117.)
- Dock foot, structural (FD119.)
- Dock-to-dock connector (FD128.)
- Dock power harness (FD151.)
- Finished end, architectural, dock (FD16A.)

Dimensions

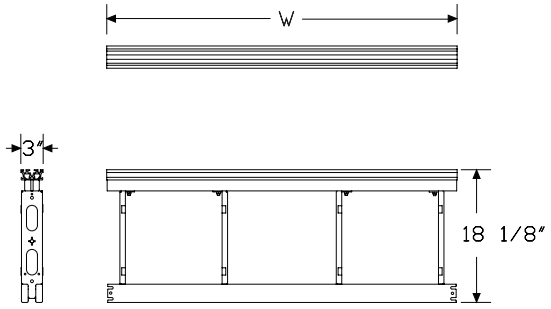

Specification Information

Step 1.

FD110. A

Step 2. Width

42	42″ wide
48	48″ wide
60	60″ wide
72	72″ wide
84	84″ wide
96	96″ wide

Prices for Steps 1-2.

FD110.	**42**	$935
	48	$1017
	60	$1148
	72	$1272
	84	$1400
	96	$1525

Step 3. Top Rail Finish

AN	clear anodized aluminum	+$0

Dock Foot, Structural (Support Foot) FD119.

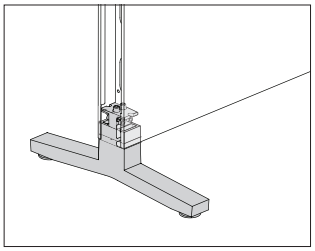

Product Information

Description

This painted metal individual structural foot supports 1 end of a dock or the attachment point of 2 adjacent docks, and can support a dock wall run. It adjusts up to 1½″ for leveling. Attachment hardware included.

Notes

This foot is used in place of the dock foot (FD117.).

Order service kit (U1BDWGL) for additional leveling spacers.

See planning guide for length of run and proper support information.

Dimensions

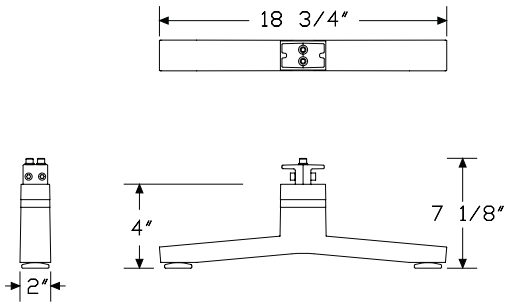

Specification Information

Step 1.

FD119. A	$364

Step 2. Surface Finish

Sand Texture Paint		
8Q	folkstone grey	+$0
91	white	+$0
98	studio white	+$0
BK	black	+$0
CL	cool grey neutral	+$0
G1	graphite	+$0
WL	sandstone	+$0
WN	warm grey neutral	+$0

Metallic Paint		
CN	metallic champagne	+$0
EH	metallic bronze	+$0
MS	metallic silver	+$0
SNA	satin aluminum	+$30
SNB	satin bronze	+$30
SNC	satin carbon	+$30

Dock Foot FD117.

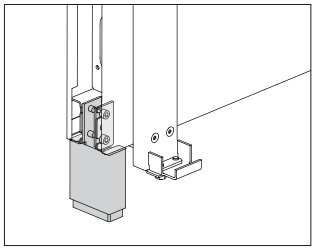

Product Information

Description

This painted metal individual foot attaches at 1 end of a dock or at the attachment point of 2 adjacent docks. It adjusts up to 2″ for leveling. Attachment hardware included.

Notes

Specify configuration (1A) for end-of-dock applications.

Specify shared configuration (1B) for use where 2 docks come together.

See planning guide for length of run and proper support information.

Dimensions

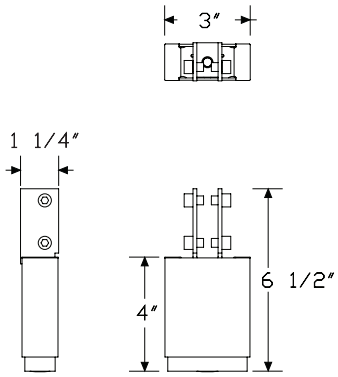

Specification Information

Step 1.

FD117. A

Step 2. Configuration

1A	end-of-dock
1B	shared

Prices for Steps 1-2.

FD117.	**1A**	$174
	1B	$178

Step 3. Surface Finish

Finish

3G	brownstone	+$0

Sand Texture Paint

8Q	folkstone grey	+$0
91	white	+$0
98	studio white	+$0
BK	black	+$0
CL	cool grey neutral	+$0
G1	graphite	+$0
WL	sandstone	+$0
WN	warm grey neutral	+$0

Metallic Paint

CN	metallic champagne	+$0
EH	metallic bronze	+$0
MS	metallic silver	+$0
SNA	satin aluminum	+$10
SNB	satin bronze	+$10
SNC	satin carbon	+$10

Dock-to-Dock Connector FD128.

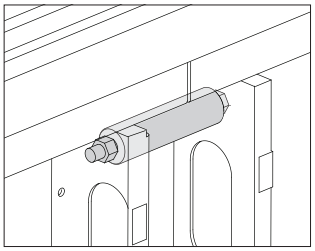

Product Information

Description

This connecting hardware joins 2 docks together in-line.

Notes

Requires 1 dock foot (FD117.1B) or 1 structural foot (FD119.), ordered separately.

Dimensions

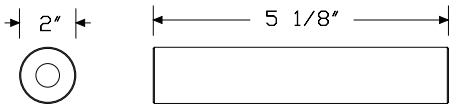

Specification Information

Step 1.

FD128. A

Step 2. Configuration

1 in-line connection

Prices for Steps 1-2.

FD128. 1	$59

Low Storage to Dock Bracket FD292.

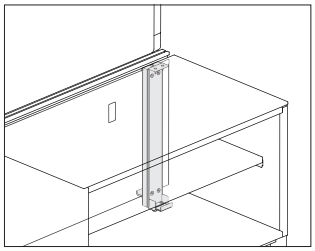

Product Information

Description

This bracket attaches a Canvas wood or metal low credenza with 4″ foot and thin top and provides structural support to the dock wall run. It allows the credenza unit to be positioned parallel or perpendicular to the dock. Includes 1 bracket and attachment hardware.

Notes

For use with low credenza with 4″ foot and thin top.

Bracket attaches with a 1″ cable management gap.

2 brackets required for each credenza unit.

For information about properly supporting the dock, see Canvas Dock planning guide. See Canvas Office Landscape® planning guide for specific surface support guidelines when using the Canvas low credenza.

Dimensions

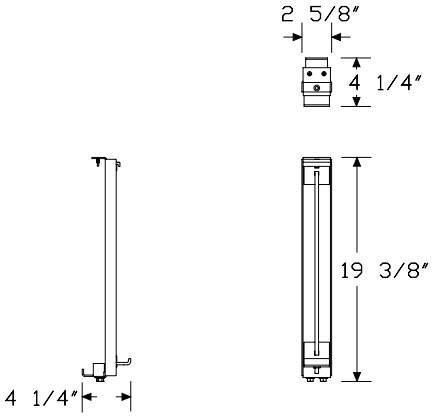

Specification Information

Step 1.

FD292. A

Step 2. Storage Type

M	for use with metal low credenza with 4″ high foot
W	for use with wood low credenza with 4″ high foot

Step 3. Storage Attachment Position

G	1″ gap, for cord drop

Prices for Steps 1-3.

		G
FD292.	**M**	$186
	W	$186

Step 4. Surface Finish

MS	metallic silver	+$0

Low Storage to Dock Spacer FD293.

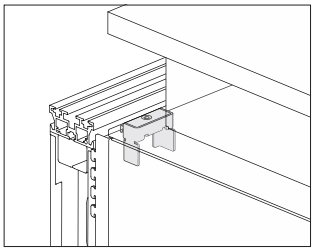

Product Information

Description

This spacer attaches a Canvas wood or metal low credenza with 4″ foot and thin top to the dock. It creates a uniform 1″ cable management gap between the dock and credenza when the low storage to dock bracket is being used to support a dock wall run. Includes 1 spacer.

Notes

2 spacers required for each low credenza.

Spacer does not provide structural support to the dock wall.

For information about properly supporting the dock, see Canvas Dock planning guide. See Canvas Office Landscape® planning guide for specific surface support guidelines when using the Canvas low credenza.

Dimensions

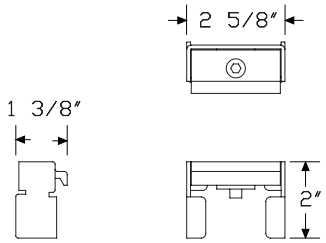

Specification Information

Step 1.

FD293. A

Step 2. Storage Attachment Position

G	1″ gap, for cord drop	

Prices for Steps 1-2.

FD293. G	$36

Step 3. Surface Finish

MS	metallic silver	+$0

Finished End, Architectural, Dock FD16A.

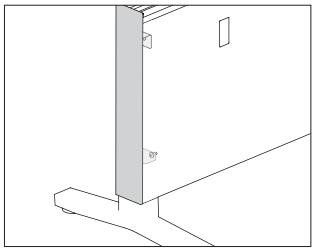

Product Information

Description

This 18¼"-high painted metal cover finishes 1 end of a single dock. Attachment hardware included.

Dimensions

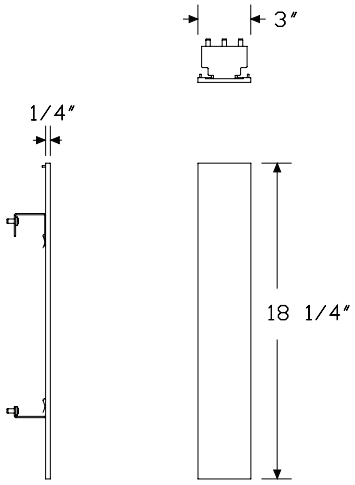

Specification Information

Step 1.

FD16A. A

Step 2. Height

22	22" high

Step 3. Surface Material

P	painted

Prices for Steps 1-3.

	P
FD16A. 22	$260

Step 4. Surface Finish

Metallic Paint

CN	metallic champagne	+$0
EH	metallic bronze	+$0
MS	metallic silver	+$0
SNA	satin aluminum	+$10
SNB	satin bronze	+$10
SNC	satin carbon	+$10

Sand Texture Paint

8Q	folkstone grey	+$0
91	white	+$0
98	studio white	+$0
BK	black	+$0
CL	cool grey neutral	+$0
G1	graphite	+$0
WL	sandstone	+$0
WN	warm grey neutral	+$0

Gallery Panel, Dock Attached FD113.

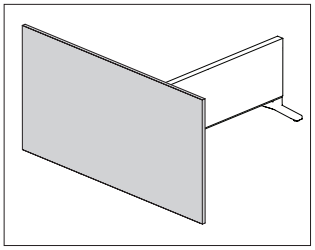

Product Information

Description

This structural panel stands on the floor and attaches to a dock to provide end of run support and privacy. It is 1¼" thick and has a laminate surface with thermoplastic edge, laminate surface with a thermoplastic backed plywood edge, or veneer surface and edge. Leveling glides and attachment hardware included.

Notes

Gallery panels 24"-72" wide are a single panel construction; 84"-144" wide are a 3 panel construction.

Attachment direction is determined by facing the gallery panel from outside the workstation. Left attachment (L) connects the left side of a gallery panel to the end of a dock. Right attachment (R) connects the right side of a gallery panel to the end of a dock. Mid attachment (M) connects the middle of a gallery panel to the end of a dock.

Mid-attached gallery panels are 3" wider than nominal dimensions.

Gallery panels 72" wide and wider require attachment to adjacent surfaces; hardware is included.

Leveling glides provide 2" of adjustment.

Grain direction is vertical on veneer, wood-grain and directional laminates.

Wood-grain and directional laminates are not available on 60"-72" wide gallery panels and are not a recommended application when using ZZ open line wood-grain or directional laminates.

Dimensions

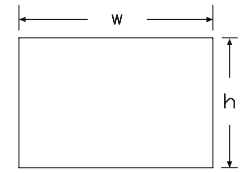

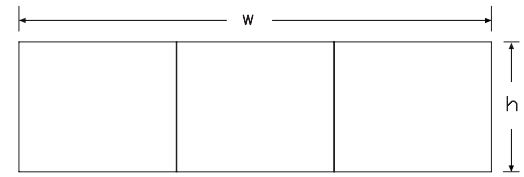

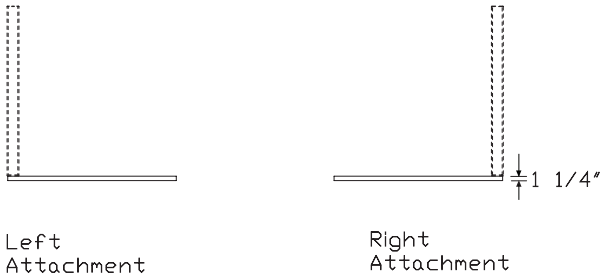

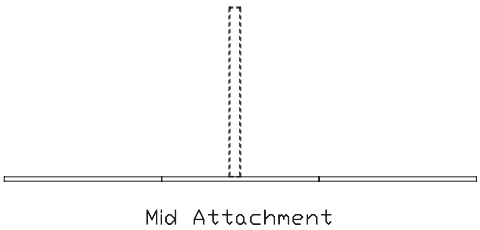

Gallery Panel, Dock Attached

continued

Specification Information

Step 1.

FD113. A

Step 2. Height

22	22" high
29	29" high
42	42" high
46	46" high

Step 3. Width

For 22" high (22)

24	24" wide
30	30" wide
36	36" wide
42	42" wide
48	48" wide
60	60" wide
72	72" wide

For 29" high (29), 42" high (42), or 46" high (46)

24	24" wide
30	30" wide
36	36" wide
42	42" wide
48	48" wide
60	60" wide
72	72" wide
84	84" wide
96	96" wide
120	120" wide
144	144" wide

Step 4. Surface Material

L	high-pressure laminate/thermoplastic edge
W	veneer A
U	high - pressure laminate/universal edge

Step 5. Attachment Method

For 24" wide (24), 30" wide (30), 36" wide (36), or 42" wide (42)

L	left attachment
R	right attachment

For 48" wide (48), 60" wide (60), or 72" wide (72)

L	left attachment
M	mid attachment
R	right attachment

For 84" wide (84), 96" wide (96), 120" wide (120), or 144" wide (144)

M	mid attachment

Prices for Steps 1-5.

		LL	LM	LR	WL	WM	WR
FD113. 22	**24**	$422	—	422	893	—	893
	30	$498	—	498	1229	—	1229
	36	$575	—	575	1397	—	1397
	42	$690	—	690	1649	—	1649
	48	$805	805	805	1899	1879	1899
	60	$957	957	957	2234	2211	2234
	72	$1109	1109	1109	2570	2545	2570
29	**24**	$501	—	501	1010	—	1010
	30	$615	—	615	1342	—	1342
	36	$690	—	690	1511	—	1511
	42	$806	—	806	1762	—	1762
	48	$917	917	917	2015	2015	2015
	60	$1072	1072	1072	2349	2349	2349
	72	$1224	1224	1224	2682	2682	2682
	84	—	$1759	—	—	3616	—
	96	—	$1921	—	—	3982	—
	120	—	$2142	—	—	4701	—
	144	—	$2468	—	—	5425	—
42	**24**	$754	—	754	1653	—	1653
	30	$920	—	920	2020	—	2020
	36	$1003	—	1003	2204	—	2204
	42	$1128	—	1128	2475	—	2475
	48	$1254	1254	1254	2751	2751	2751
	60	$1422	1422	1422	3115	3115	3115
	72	$1586	1586	1586	3482	3482	3482
	84	—	$2277	—	—	4747	—
	96	—	$2452	—	—	5140	—
	120	—	$2699	—	—	5932	—
	144	—	$3057	—	—	6723	—

Gallery Panel, Dock Attached

continued

46 24	$802	—	802	1758	—	1758
30	$960	—	960	2109	—	2109
36	$1040	—	1040	2283	—	2283
42	$1162	—	1162	2544	—	2544
48	$1281	1281	1281	2807	2807	2807
60	$1441	1441	1441	3159	3159	3159
72	$1598	1598	1598	3509	3509	3509
84	—	$2347	—	—	4921	—
96	—	$2516	—	—	5299	—
120	—	$2757	—	—	6057	—
144	—	$3100	—	—	6815	—

46 24	$802	—	802
30	$960	—	960
36	$1040	—	1040
42	$1162	—	1162
48	$1281	1281	1281
60	$1441	1441	1441
72	$1598	1598	1598
84	—	$2242	—
96	—	$2414	—
120	—	$2757	—
144	—	$3100	—

	UL	UM	UR
FD113. 22 24	$346	—	346
30	$498	—	498
36	$575	—	575
42	$690	—	690
48	$805	805	805
60	$957	957	957
72	$1109	1109	1109
29 24	$462	—	462
30	$615	—	615
36	$690	—	690
42	$806	—	806
48	$917	917	917
60	$1072	1072	1072
72	$1224	1224	1224
84	—	$1648	—
96	—	$1812	—
120	—	$2142	—
144	—	$2468	—
42 24	$754	—	754
30	$920	—	920
36	$1003	—	1003
42	$1128	—	1128
48	$1254	1254	1254
60	$1422	1422	1422
72	$1586	1586	1586
84	—	$2161	—
96	—	$2342	—
120	—	$2699	—
144	—	$3057	—

Gallery Panel, Dock Attached

continued

Step 6.

Surface Finish

For 24" wide (24), 30" wide (30), 36" wide (36), 42" wide (42), 48" wide (48), 84" wide (84), 96" wide (96), 120" wide (120), or 144" wide (144) with high-pressure laminate/thermoplastic edge (L), or high - pressure laminate/universal edge (U)

28	canyon	+$0
29	misted	+$0
38	twilight	+$0
39	desert	+$0
76	light brown walnut	+$0
8Q	folkstone grey	+$0
91	white	+$0
98	studio white	+$0
BU	black umber	+$0
CL	cool grey neutral	+$0
HF	inner tone light	+$0
HM	natural maple	+$0
HP	light anigre	+$0
HX	aged cherry	+$0
LBA	clear on ash	+$0
LBR	phantom ecru	+$0
LBS	phantom cocoa	+$0
LBU	medium matte walnut	+$0
LBV	warm grey teak	+$0
LBB	oak on ash	+$0
LBC	walnut on ash	+$0
LBF	neutral twill	+$0
LBJ	graphite twill	+$0
LBQ	white twill	+$0
LT	light tone	+$0
LU	soft white	+$0
WL	sandstone	+$0
WN	warm grey neutral	+$0
X1	chalk white	+$0

Surface Finish

For 60" wide (60) or 72" wide (72) with high-pressure laminate/ thermoplastic edge (L), or high - pressure laminate/universal edge (U)

8Q	folkstone grey	+$0
91	white	+$0
98	studio white	+$0
CL	cool grey neutral	+$0
LU	soft white	+$0
WL	sandstone	+$0
WN	warm grey neutral	+$0

Surface Finish

For 60" wide (60) or 72" wide (72) with high-pressure laminate/ thermoplastic edge (L), or high - pressure laminate/universal edge (U)

28	canyon	+$0
29	misted	+$0
38	twilight	+$0
39	desert	+$0

Surface/Edge Finish: Wood Veneer

For veneer (W)

2U	light brown walnut A	+$85
40	dark brown walnut A	+$85
CHD	noble cherry A	+$85
ET	clear on ash A	+$85
EU	oak on ash A	+$85
EV	walnut on ash A	+$85
EW	medium matte walnut A	+$85
UL	natural maple A	+$85
WHN	natural white oak A	+$85

Step 7. Edge Finish

For high-pressure laminate/thermoplastic edge (L)

76	light brown walnut	+$0
8Q	folkstone grey	+$0
91	white	+$0
98	studio white	+$0
BU	black umber	+$0
CL	cool grey neutral	+$0
HF	inner tone light	+$0
HM	natural maple	+$0
HP	light anigre	+$0
HX	aged cherry	+$0
LBA	clear on ash	+$0
LBR	phantom ecru	+$0
LBS	phantom cocoa	+$0
LBU	medium matte walnut	+$0
LBV	warm grey teak	+$0
LBB	oak on ash	+$0
LBC	walnut on ash	+$0
LBF	neutral twill	+$0
LBJ	graphite twill	+$0
LBQ	white twill	+$0
LU	soft white	+$0
WL	sandstone	+$0
WN	warm grey neutral	+$0

Gallery Panel, Dock Attached

continued

For high - pressure laminate/universal edge (U)

PLY	plywood edge	+$50

Lower Cladding FD170.

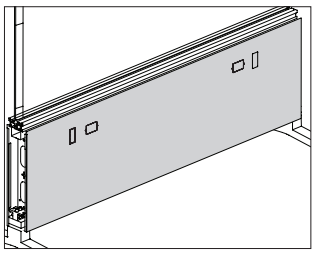

Product Information

Description

This one-piece painted metal cladding finishes 1 side of a dock. It includes cladding and attachment hardware for 1 side of frame. Optional knockouts include 2 data face plate perforated knockouts, 1 for each end of the cladding, and knockouts to route power conduit out of the dock to the underside of a work surface when the undersurface power module is used.

Notes

Can be specified with knockouts (K) for power/data or without knockouts (N).

Knockouts are for NEMA data face plates.

Data face plates are field supplied.

For power access below the surface, specify undersurface power module (FD152.) and cable manager dock to surface (FD199.) separately.

Specify cladding to match width of dock structure.

Dimensions

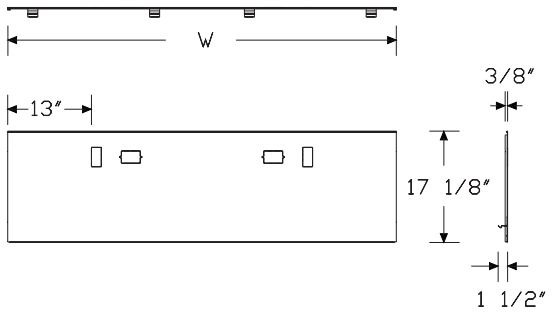

Specification Information

Step 1.

FD170. A

Step 2. Width

42	42″ wide
48	48″ wide
60	60″ wide
72	72″ wide
84	84″ wide
96	96″ wide

Step 3. Surface Material

P	painted

Step 4. Cord Knockouts

K	knockouts
N	no knockouts

Prices for Steps 1-4.

		K	N
FD170.	**42 P**	$294	294
	48 P	$300	300
	60 P	$315	315
	72 P	$331	331
	84 P	$386	386
	96 P	$430	430

Step 5. Surface Finish

Metallic Paint

CN	metallic champagne	+$0
EH	metallic bronze	+$0
MS	metallic silver	+$0
SNA	satin aluminum	+$10
SNB	satin bronze	+$10
SNC	satin carbon	+$10

Sand Texture Paint

8Q	folkstone grey	+$0
91	white	+$0
98	studio white	+$0
BK	black	+$0
CL	cool grey neutral	+$0
G1	graphite	+$0
WL	sandstone	+$0
WN	warm grey neutral	+$0

Power Entry, Internal Direct Connect - Floor FD144.

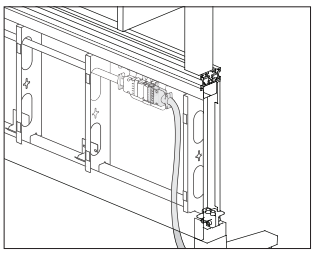

Product Information

Description

This power entry connects a building's electrical supply from a wall, floor or column to the dock. It is available in 8-wire and 10-wire configurations and distributes up to 4 20-amp circuits. It connects to the modular connection location on the end of a dock power harness. Power entry is UL listed and Canadian UL listed.

Notes

Power entry uses 1 modular connection location on each end of adjacent dock power harnesses (FD151.).

Licensed electrician must wire the power entry.

Dimensions

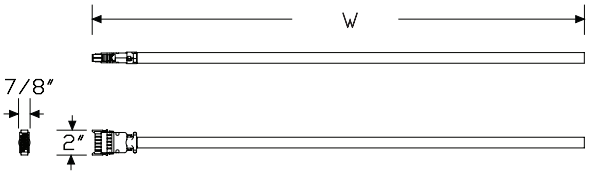

Specification Information

Step 1.

FD144. A

Step 2. Configuration

08	8-wire, 4-circuit, shared neutral
10	10-wire, 4-circuit, separate neutrals

Step 3. Length

06	6′ long
12	12′ long
18	18′ long
24	24′ long

Prices for Steps 1-3.

		06	12	18	24
FD144.	**08**	$318	448	544	640
	10	$318	448	544	640

Power Entry, New York - Floor Power Entry FD141.

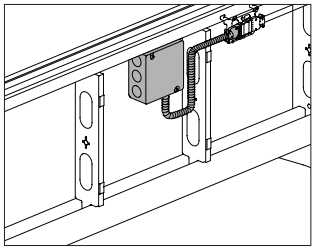

Product Information

Description

This floor power entry connects a building's electrical supply from a wall, floor or column to the dock power harness. It connects to the modular connection location on the end of a dock power harness, and includes a junction box. Power entry is UL listed and Canadian UL listed.

Notes

Licensed electrician must wire power entry.

Power entry uses 1 modular connection location on each end of adjacent dock power harnesses (FD151.).

Dock power harness, internal (FD151.) is required. Order separately.

Dimensions

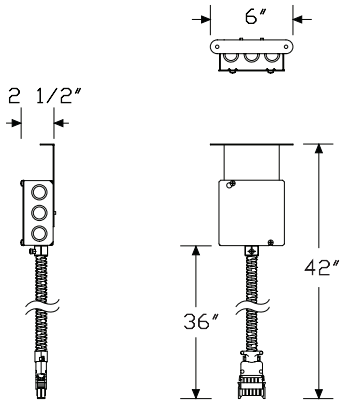

Specification Information

Step 1.

FD141. A

Step 2. Configuration

08	8-wire, 4-circuit, shared neutral
10	10-wire, 4-circuit, separate neutrals

Step 3. Length

30	30″ long

Prices for Steps 1-3.

		30
FD141.	**08**	$567
	10	$567

Ceiling Power Entry FD142.

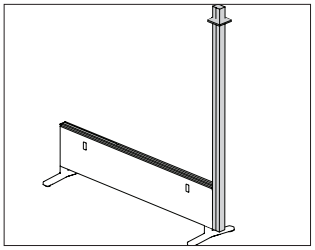

Product Information

Description

This power entry connects a ceiling electrical supply to the end of a dock run. It distributes up to 4 20-amp circuits. The power entry comes with a 10'-high pole that can be field cut to the appropriate length, ceiling trim, connecting hardware conduit, and factory supplied electrical harness. The power entry plugs into the end of the harness. Power entry is UL listed and Canadian UL listed.

Notes

Power entry uses 1 modular connection location on each end of adjacent dock power harnesses (FD151.).

Licensed electrician must wire the power entry.

Dimensions

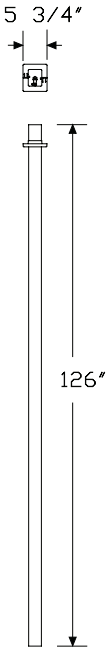

Specification Information

Step 1.

FD142. A

Step 2. Dock Height

22	22″ high dock

Step 3. Power Configuration

08	8-wire, 4-circuit, shared neutral
10	10-wire, 4-circuit, separate neutrals
N	nonpowered

Prices for Steps 1-3.

	08	10	N
FD142. 22	$1208	1208	677

Step 4. Finish

Finish		
3G	brownstone	+$0

Sand Texture Paint		
8Q	folkstone grey	+$0
91	white	+$0
98	studio white	+$0
BK	black	+$0
CL	cool grey neutral	+$0
G1	graphite	+$0
WL	sandstone	+$0
WN	warm grey neutral	+$0

Dock Power Harness FD151.

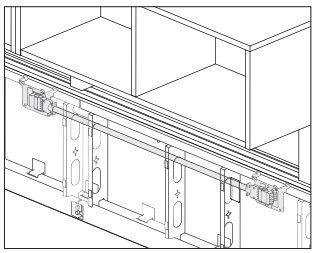

Product Information

Description

This power harness distributes power within a dock. It has 2 power blocks with connecting conduit and is suspended from the dock top rail within the interior of the dock. It is available in 8-wire and 10-wire configurations and distributes up to 4 20-amp circuits. Each power block has 3 additional modular connection locations to connect power entries, block to block jumpers, and power modules. Harness is UL listed.

Notes

Specify width of power harness to match width of dock structure.

Dimensions

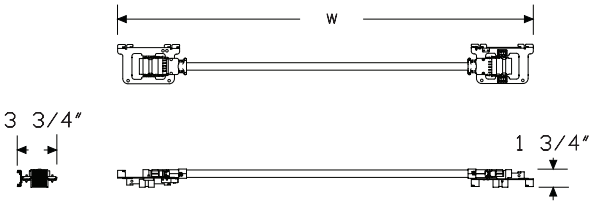

Specification Information

Step 1.

FD151. A

Step 2. Configuration

08	8-wire, 4-circuit, shared neutral
10	10-wire, 4-circuit, separate neutrals

Step 3. Width

42	42" wide
48	48" wide
60	60" wide
72	72" wide
84	84" wide
96	96" wide

Prices for Steps 1-3.

	42	48	60	72	84	96
FD151. 08	$265	303	376	449	524	598
10	$265	303	376	449	524	598

Power, Block to Block Jumper FD154.

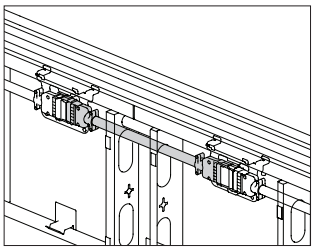

Product Information

Description

This power jumper routes power from a dock power harness to an adjacent dock power harness in an in-line connection. It is available in 8-wire and 10-wire configurations and distributes up to 4 20-amp circuits. It is UL listed and Canadian UL listed.

Notes

Uses 1 modular connection location on each end of adjacent dock power harnesses (FD151.).

Dimensions

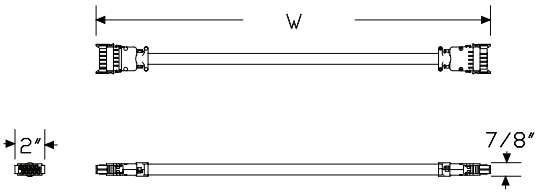

Specification Information

Step 1.

FD154. A

Step 2. Configuration

08	8-wire, 4-circuit, shared neutral
10	10-wire, 4-circuit, separate neutrals

Step 3. Jumper Application

S	for straight dock to dock connections

Step 4. Length

20	20″ long

Prices for Steps 1-4.

	20
FD154. 08 S	$170
10 S	$170

Power Module - Bottom of Dock FD150.

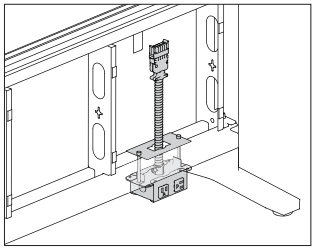

Product Information

Description

This power module attaches at the bottom of the dock. The modular plug end connects to a dock power harness. Power module includes 4 simplex receptacles, 2 on each side of the dock. Receptacles in this module are rated for 15 amps. Attachment hardware included. Power module is UL listed and Canadian UL listed.

Notes

For use with credenza units, order power/data module spacer (FD197.) separately.

Dimensions

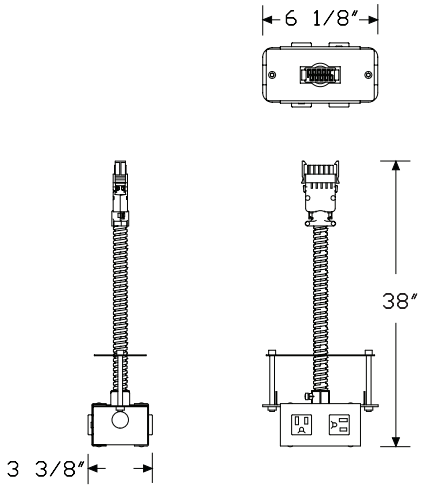

Specification Information

Step 1.

FD150. A

Step 2. Type

AN	8 wire, circuit A, share neutral
BN	8 wire, circuit B, share neutral
CN	8 wire, circuit C, share neutral
DN	8 wire, circuit D, share neutral
BG	8 wire, circuit B, isolated ground
CG	8 wire, circuit C, isolated ground
DG	8 wire, circuit D, isolated ground
ADN	8 wire, (1) circuit A and (1) circuit D on each side
BCI	8 wire, (1) circuit B and (1) circuit CG isolated ground on each side
1N	10 wire, separate neutrals, circuit 1
2N	10 wire, separate neutrals, circuit 2
3N	10 wire, separate neutrals, circuit 3
3G	10 wire, separate neutrals, isolated ground, circuit 3
4N	10 wire, separate neutrals, circuit 4
4G	10 wire, separate neutrals, isolated ground, circuit 4
1N4N	10 wire, (1) circuit 1N and (1) circuit 4N on each side
2N3G	10 wire, (1) circuit 2N and (1) isolated ground 3G on each side

Prices for Steps 1-2.

FD150.	**AN**	$524
	BN	$524
	CN	$524
	DN	$524
	BG	$524
	CG	$524
	DG	$524
	ADN	$524
	BCI	$524
	1N	$524
	2N	$524
	3N	$524
	3G	$524
	4N	$524
	4G	$524
	1N4N	$524
	2N3G	$524

Power Module - Bottom of Dock

continued

Step 3. Finish

Metallic Paint		
MS	metallic silver	+$0
SNA	satin aluminum	+$10
SNB	satin bronze	+$10
SNC	satin carbon	+$10

Sand Texture Paint		
8Q	folkstone grey	+$0
91	white	+$0
98	studio white	+$0
BK	black	+$0
G1	graphite	+$0
WL	sandstone	+$0

Power Module - Bottom of Dock - 20 amp FD156.

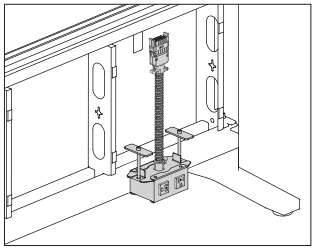

Product Information

Description

This power module attaches at the bottom of the dock. The modular plug end connects to a dock power harness. Power module includes 4 simplex receptacles, 2 on each side of the dock. Receptacles in this module are rated for 20 amps. Attachment hardware included. Power module is UL listed and Canadian UL listed.

Notes

Receptacles are black. Metal housing is painted.

Dimensions

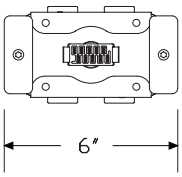

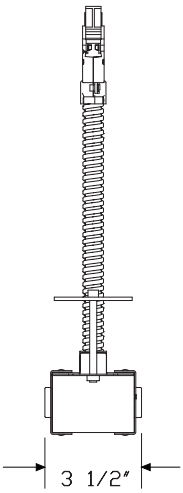

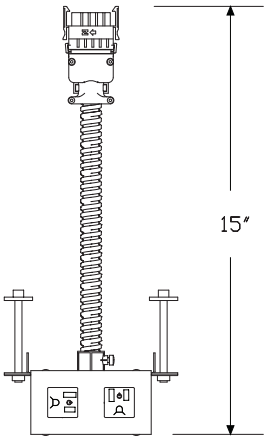

Specification Information

Step 1.

FD156. A

Step 2. Type

AN	8 wire, shared neutral, circuit A
BN	8 wire, shared neutral, circuit B
CN	8 wire, shared neutral, circuit C
DN	8 wire, shared neutral, circuit D
BG	8 wire, shared neutral, circuit B, isolated ground
CG	8 wire, shared neutral, circuit C isolated ground
DG	8 wire, shared neutral, circuit D, isolated ground
ADN	8 wire, shared neutral, (1) circuit A and (1) circuit D on each side
BCI	8 wire, shared neutral, (1) circuit B and (1) circuit CG isolated ground on each side
1N	10 wire, separate neutrals, circuit 1
2N	10 wire, separate neutrals, circuit 2
3N	10 wire, separate neutrals, circuit 3
3G	10 wire, seperate neutrals, circuit 3, isolated ground
4N	10 wire, separate neutrals, circuit 4
4G	10 wire, separate neutrals, isolated ground, circuit 4
1N4N	10 wire, (1) circuit 1N and (1) circuit 4N on each side
2N3G	10 wire, (1) circuit 2N and (1) isolated ground 3G on each side

Prices for Steps 1-2.

FD156.	**AN**	$598
	BN	$598
	CN	$598
	DN	$598
	BG	$598
	CG	$598
	DG	$598
	ADN	$598
	BCI	$598
	1N	$598
	2N	$598
	3N	$598
	3G	$598
	4N	$598
	4G	$598
	1N4N	$598
	2N3G	$598

Power Module - Bottom of Dock - 20 amp *continued*

Step 3. Finish

Metallic Paint		
MS	metallic silver	+$0
SNA	satin aluminum	+$10
SNB	satin bronze	+$10
SNC	satin carbon	+$10

Sand Texture Paint		
8Q	folkstone grey	+$0
91	white	+$0
98	studio white	+$0
BK	black	+$0
G1	graphite	+$0
WL	sandstone	+$0

Under Surface Power Module FD152.

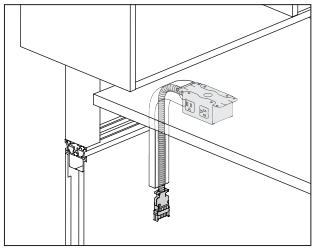

Product Information

Description

This power module attaches beneath a dock-supported work surface. The modular plug end connects to a dock power harness. Power module includes 4 simplex receptacles, rated for 15 amps. Attachment hardware included. Power module is UL listed and Canadian UL listed.

Notes

Specify cladding (FD170.) with knockouts (K).

To cover conduit, data cables, and cladding knockout, specify cable manager dock to surface (FD199.).

Uses 1 modular connection location on each end of adjacent dock power harnesses (FD151.).

Dimensions

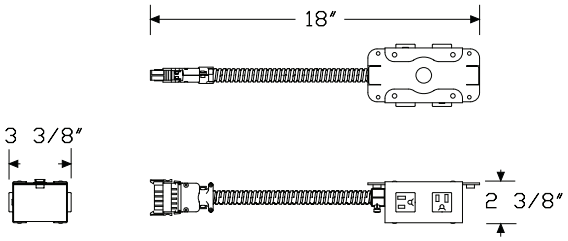

Specification Information

Step 1.

FD152. A

Step 2. Type

AN	8 wire, circuit A, share neutral
BN	8 wire, circuit B, share neutral
CN	8 wire, circuit C, share neutral
DN	8 wire, circuit D, share neutral
BG	8 wire, circuit B, isolated ground
CG	8 wire, circuit C, isolated ground
DG	8 wire, circuit D, isolated ground
ADN	8 wire, (1) circuit A and (1) circuit D on each side
BCI	8 wire, (1) circuit B and (1) circuit CG isolated ground on each side
1N	10 wire, separate neutrals, circuit 1
2N	10 wire, separate neutrals, circuit 2
3N	10 wire, separate neutrals, circuit 3
3G	10 wire, separate neutrals, isolated ground, circuit 3
4N	10 wire, separate neutrals, circuit 4
4G	10 wire, separate neutrals, isolated ground, circuit 4
1N4N	10 wire, (1) circuit 1N and (1) circuit 4N on each side
2N3G	10 wire, (1) circuit 2N and (1) isolated ground 3G on each side

Step 3. Cord/Conduit Length

03	3′ cord/conduit

Prices for Steps 1-3.

		03
FD152.	**AN**	$524
	BN	$524
	CN	$524
	DN	$524
	BG	$524
	CG	$524
	DG	$524
	ADN	$524
	BCI	$524
	1N	$524
	2N	$524
	3N	$524
	3G	$524
	4N	$524
	4G	$524
	1N4N	$524
	2N3G	$524

Under Surface Power Module

continued

Step 4. Finish		
MS	metallic silver	+$0
SNA	satin aluminum	+$10
SNB	satin bronze	+$10
SNC	satin carbon	+$10
8Q	folkstone grey	+$0
91	white	+$0
98	studio white	+$0
BK	black	+$0
G1	graphite	+$0
WL	sandstone	+$0

Power Module-Top of Dock FD158.

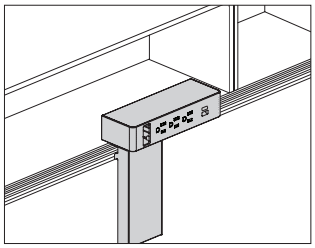

Product Information

Description

This power module attaches to the Canvas dock top rail. The unit has a modular connection end that attaches to 1 connection point of the internal dock power harness. It has 3 power outlets, 2 USB A/C combo charging ports, an opening for data module terminations, and an integrated cable manager rated for 15 amps. Mounting hardware included. Product is UL listed.

Notes

Power unit is plastic; vertical wire chase is painted metal. When specifying white (91) or graphite (G1) paint, plastic housing color matches specified painted surface finish. When specifying metallic silver (MS) paint, plastic housing color is cool grey neutral (CL).

USB ports will charge most small electronic devices. Software in each device controls the ability to accept charge via USB. Each USB port supplies 10 watts of power.

When attached to Canvas dock top rail, top of power unit is 25¼″ above the floor.

8 wire, shared neutral product (AN, BN, CN, DN) is a 3+1 configuration.

Dimensions

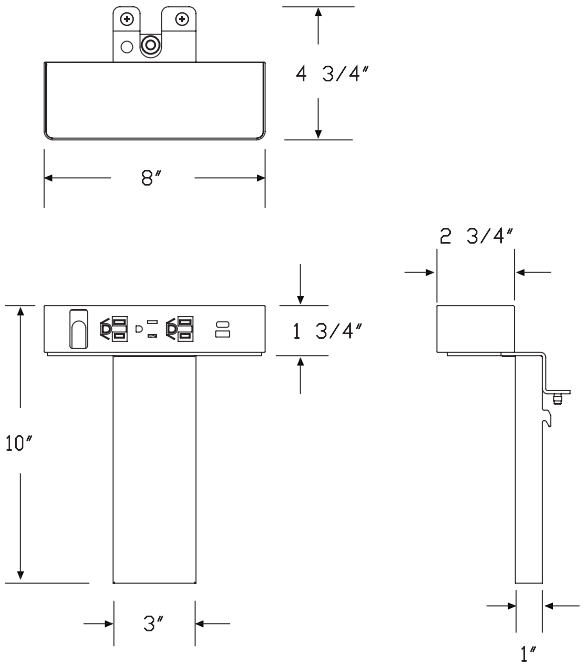

Power Module-Top of Dock

continued

Specification Information
Step 1.
FD158. A

Step 2. Configuration	
H	3 simplex receptables, 2 powered USB, 1 Data Opening

Step 3. Circuit Type	
AN	8 wire, circuit A, shared neurtral
BN	8 wire, circuit B, shared neurtral
CN	8 wire, circuit C, shared neurtral
DN	8 wire, circuit D, shared neurtral
1N	10 wire, separate neutrals, circuit 1
2N	10 wire, separate neutrals, circuit 2
3N	10 wire, separate neutrals, circuit 3
4N	10 wire, separate neutrals, circuit 4
H	for hardwiring-chicago code-conduit with open end

Prices for Steps 1-3.

	AN	BN	CN	DN	1N	2N
FD158. H	$833	833	833	833	861	861

	3N	4N	H
FD158. H	$861	861	861

Step 4. Surface Finish		
3G	brownstone	+$0
8Q	folkstone grey	+$0
91	white	+$0
98	studio white	+$0
BK	black	+$0
G1	graphite	+$0
MS	metallic silver	+$0
SNA	satin aluminum	+$10
SNB	satin bronze	+$10
SNC	satin carbon	+$10
WL	sandstone	+$0

Controlled Power Module - Bottom of Dock FD150M

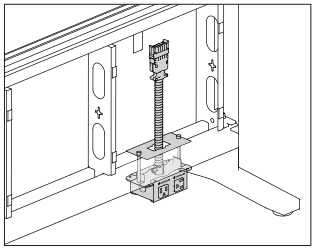

Product Information

Description

This receptacle is to be used for ASHRAE 90.1 and Title 24 compliance. A controlled receptacle should be used for any receptacles that are under automated control by the energy management system. This power module attaches at the bottom of the dock. The modular plug end connects to a dock power harness. Power module includes 4 simplex receptacles, 2 on each side of the dock. Receptacles in this module are rated for 15 amps. Attachment hardware included. Power module is UL listed and Canadian UL listed.

Notes

For modules with 2 circuits, ensure that the controlled marking is only specified for the circuits that will be under automated control by the energy management system.

For use with credenza units, order power/data module spacer (FD197.) separately.

Dimensions

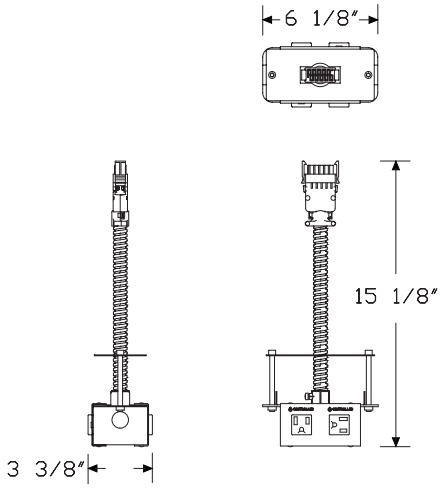

Specification Information

Step 1.

FD150M. A

Step 2. Type

AN	8 wire, circuit A, share neutral
BN	8 wire, circuit B, share neutral
CN	8 wire, circuit C, share neutral
DN	8 wire, circuit D, share neutral
BG	8 wire, circuit B, isolated ground
CG	8 wire, circuit C, isolated ground
DG	8 wire, circuit D, isolated ground
ADN	8 wire, (1) circuit A and (1) circuit D on each side
BCI	8 wire, (1) circuit B and (1) circuit CG isolated ground on each side
ADNA	8 wire, (1) circuit A and (1) circuit D on each side A controlled marking on A circuit
BCIB	8 wire, (1) circuit B and (1) circuit CG isolated ground on each side A controlled marking on B circuit
ADND	8 wire, (1) circuit A and (1) circuit D on each side A controlled marking on D circuit
BCIC	8 wire, (1) circuit B and (1) circuit CG isolated ground on each side A controlled marking on C circuit
1N	10 wire, separate neutrals, circuit 1
2N	10 wire, separate neutrals, circuit 2
3N	10 wire, separate neutrals, circuit 3
3G	10 wire, separate neutrals, isolated ground, circuit 3
4N	10 wire, separate neutrals, circuit 4
4G	10 wire, separate neutrals, isolated ground, circuit 4
1N4N	10 wire, (1) circuit 1N and (1) circuit 4N on each side
2N3G	10 wire, (1) circuit 2N and (1) isolated ground 3G on each side

Controlled Power Module - Bottom of Dock *continued*

Prices for Steps 1-2.		
FD150M.	**AN**	$524
	BN	$524
	CN	$524
	DN	$524
	BG	$524
	CG	$524
	DG	$524
	ADN	$524
	BCI	$524
	ADNA	$524
	BCIB	$524
	ADND	$524
	BCIC	$524
	1N	$524
	2N	$524
	3N	$524
	3G	$524
	4N	$524
	4G	$524
	1N4N	$524
	2N3G	$524

Step 3. Finish

Metallic Paint		
MS	metallic silver	+$0
SNA	satin aluminum	+$10
SNB	satin bronze	+$10
SNC	satin carbon	+$10

Sand Texture Paint		
8Q	folkstone grey	+$0
91	white	+$0
98	studio white	+$0
BK	black	+$0
G1	graphite	+$0
WL	sandstone	+$0

Under Surface Controlled Power Module FD152M

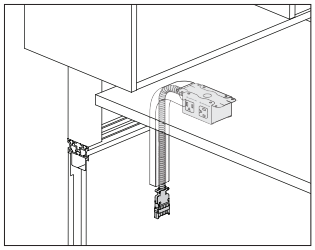

Product Information

Description

This receptacle is to be used for ASHRAE 90.1 and Title 24 compliance. A controlled receptacle should be used for any receptacles that are under automated control by the energy management system. This power module attaches beneath a dock-supported work surface. The modular plug end connects to a dock power harness. Power module includes 4 simplex receptacles, rated for 15 amps. Attachment hardware included. Power module is UL listed and Canadian UL listed.

Notes

For modules with 2 circuits, ensure that the controlled marking is only specified for the circuits that will be under automated control by the energy management system.

Dimensions

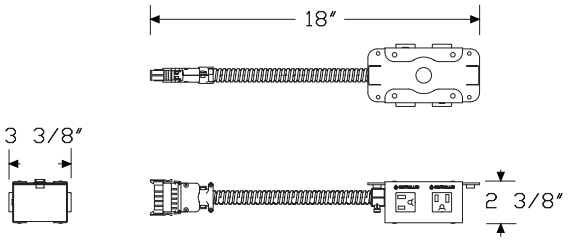

Specification Information

Step 1.

FD152M. A

Step 2. Type

AN	8 wire, circuit A, share neutral
BN	8 wire, circuit B, share neutral
CN	8 wire, circuit C, share neutral
DN	8 wire, circuit D, share neutral
BG	8 wire, circuit B, isolated ground
CG	8 wire, circuit C, isolated ground
DG	8 wire, circuit D, isolated ground
ADN	8 wire, (1) circuit A and (1) circuit D on each side
BCI	8 wire, (1) circuit B and (1) circuit CG isolated ground on each side
ADNA	8 wire, (1) circuit A and (1) circuit D on each side A controlled marking on A circuit
BCIB	8 wire, (1) circuit B and (1) circuit CG isolated ground on each side A controlled marking on B circuit
ADND	8 wire, (1) circuit A and (1) circuit D on each side A controlled marking on D circuit
BCIC	8 wire, (1) circuit B and (1) circuit CG isolated ground on each side A controlled marking on C circuit
1N	10 wire, separate neutrals, circuit 1
2N	10 wire, separate neutrals, circuit 2
3N	10 wire, separate neutrals, circuit 3
3G	10 wire, separate neutrals, isolated ground, circuit 3
4N	10 wire, separate neutrals, circuit 4
4G	10 wire, separate neutrals, isolated ground, circuit 4
1N4N	10 wire, (1) circuit 1N and (1) circuit 4N on each side
2N3G	10 wire, (1) circuit 2N and (1) isolated ground 3G on each side

Step 3. Cord/Conduit Length

03	3′ cord/conduit

Under Surface Controlled Power Module *continued*

Prices for Steps 1-3.		
		03
FD152M.	**AN**	$524
	BN	$524
	CN	$524
	DN	$524
	BG	$524
	CG	$524
	DG	$524
	ADN	$524
	BCI	$524
	ADNA	$524
	BCIB	$524
	ADND	$524
	BCIC	$524
	1N	$524
	2N	$524
	3N	$524
	3G	$524
	4N	$524
	4G	$524
	1N4N	$524
	2N3G	$524

Step 4. Finish

Metallic Paint		
MS	metallic silver	+$0
SNA	satin aluminum	+$10
SNB	satin bronze	+$10
SNC	satin carbon	+$10

Sand Texture Paint		
8Q	folkstone grey	+$0
91	white	+$0
98	studio white	+$0
BK	black	+$0
G1	graphite	+$0
WL	sandstone	+$0

Controlled Receptacle Decal (12 per sheet) G9999.

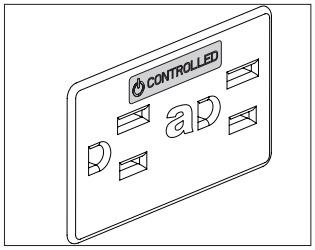

Product Information

Description

This decal is to be used for ASHRAE90.1 and Title 24 compliance. The decal is used to mark standard receptacles (new or existing) that are under automated control by the energy management system. 1 sheet includes 12 clear decals with white or black print.

Dimensions

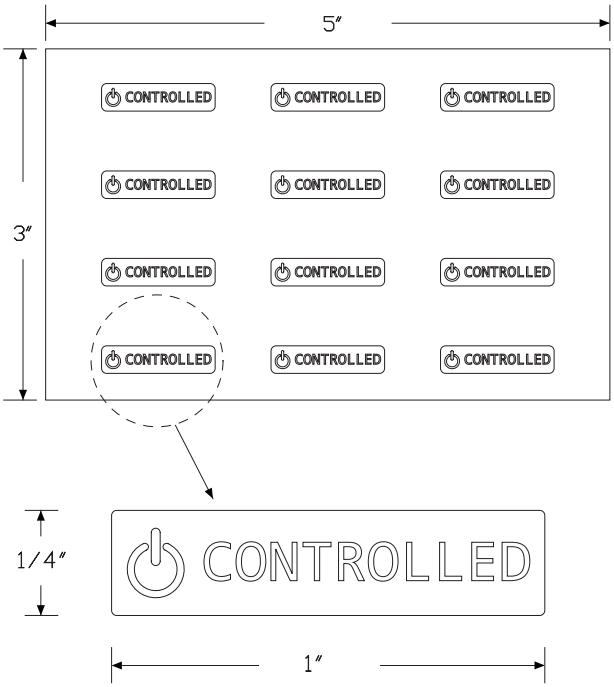

Specification Information

Step 1.

G9999. A

Step 2. Color

B	black print A
W	white print A

Prices for Steps 1-2.

G9999.	**B**	$17
	W	$17

Logic G1000 Grommet Mounted Electrical Distributor

Y1425.

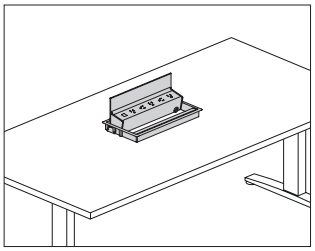

Product Information

Description

This Logic Power Access Solutions™ grommet mounted electrical distributor comes in several widths and configurations of simplex receptacles and USB-A and USB-C charging ports. The unit is powered using a standard power cord with plug end, or an IEC connector when used with Renew™ Sit-to-Stand tables. An integrated cord keeper at the face of the unit captures data cords. The unit pivots from a closed position to 135° allowing easy access to power and data cords stored beneath the unit. Product is UL listed.

Notes

Field cutting of grommet cutout is possible.

IEC connector for Renew power type (C) includes short cord designed to connect to the Renew table power cord through-leg option. Actual cord length may vary.

Simplex receptacles have alternating orientation and greater than normal plug spacing to accommodate most plug types.

USB ports provide a combined 20 watts of power to charge most devices and tablets at full speed. USB-C provides 15 watts of power and USB-A provides 10 watts of power individually. When using the USB-C and USB-A ports simultaneously, USB-C remains at 15 watts and USB-A reduces to 5 watts.

Refer to Renew Sit-to-Stand Tables planning guide for specific application information.

20' cord/conduit length (20) is recommended for Exclave® applications.

Dimensions

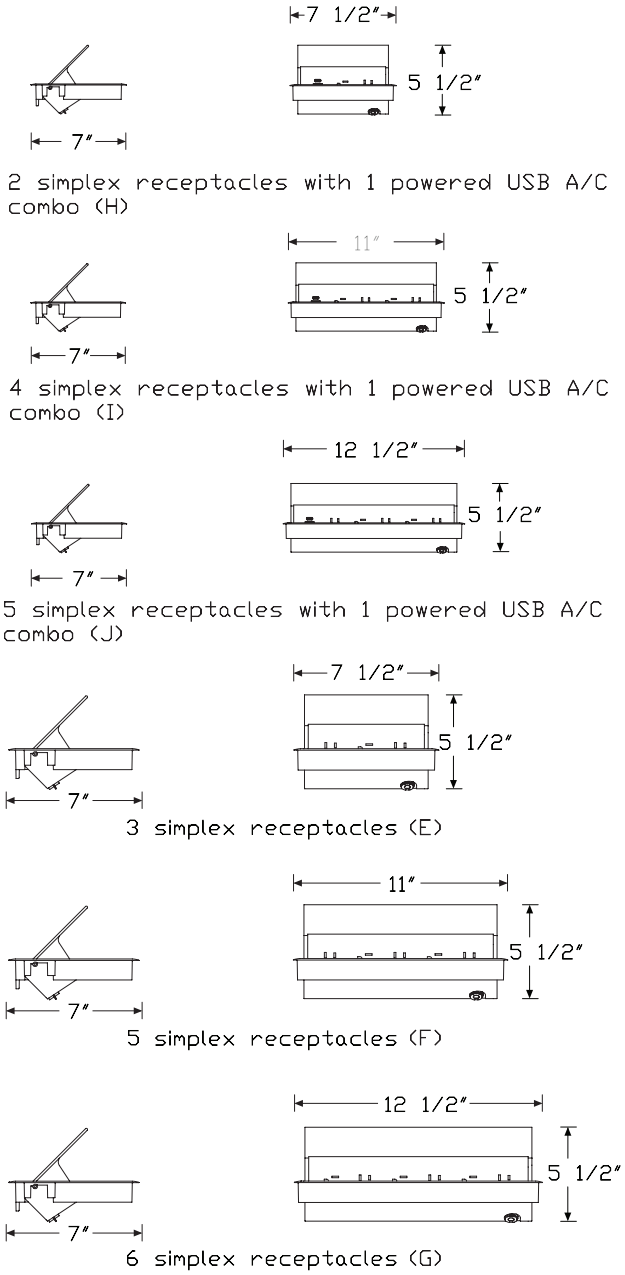

Logic G1000 Grommet Mounted Electrical Distributor *continued*

Specification Information

Step 1.

Y1425.

Step 2. Configuration

H	2 simplex receptacles, 1 powered USB A/C Combo
I	4 simplex receptacles, 1 powered USB A/C Combo
J	5 simplex receptacles, 1 powered USB A/C Combo
E	3 simplex receptacles
F	5 simplex receptacles
G	6 simplex receptacles

Step 3. Power Type

A	power cord with plug end
C	IEC connector for Renew Tables

Step 4. Cord/Conduit Length

For power cord with plug end (A)

03	3′ cord/conduit
06	6′ cord/conduit
10	10′ cord/conduit
20	20′ cord/conduit

For IEC connector for Renew Tables (C)

03	3′ cord/conduit

Prices for Steps 1-4.

			03	06	10	20
Y1425. H		**A**	$873	873	887	901
		C	$887	—	—	—
	I	**A**	$1011	1011	1028	1042
		C	$1028	—	—	—
	J	**A**	$1104	1104	1117	1130
		C	$1117	—	—	—
	E	**A**	$672	672	685	697
		C	$685	—	—	—
	F	**A**	$811	811	826	841
		C	$826	—	—	—
	G	**A**	$901	901	914	931
		C	$914	—	—	—

Step 5. Finish

91	white A	+$0
98	studio white A	+$0
BK	black A	+$0
G1	graphite A	+$0
MS	metallic silver A	+$0

Cable Clips FD198.

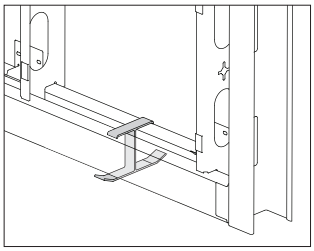

Product Information

Description

These optional cable clips are used to route wires and cables in the 1″ cable gap between the face of the dock cladding and the back of a Canvas low credenza with 4″ feet and thin top. Clip color is black. Package of 4.

Dimensions

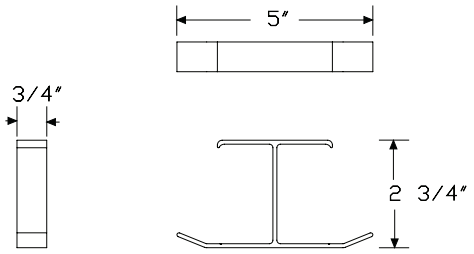

Specification Information

Step 1.

FD198. A		$99

Step 2. Finish

BK	black	+$0

Data Housing FD159.

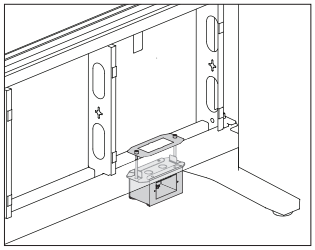

Product Information

Description

This housing mounts on the bottom of the dock or under a work surface and supports face plates with voice/data ports. Attachment hardware included.

Notes

Housing accepts a NEMA data faceplate.

Dimensions

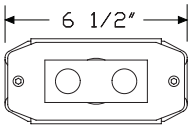

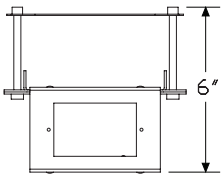

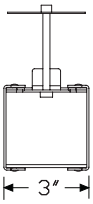

Specification Information

Step 1.

FD159. A

Step 2. Application

01	bottom of the dock
02	under work surface

Prices for Steps 1-2.

FD159.	**01**	$277
	02	$277

Step 3. Finish

Metallic Paint

MS	metallic silver	+$0
SNA	satin aluminum	+$10
SNB	satin bronze	+$10
SNC	satin carbon	+$10

Sand Texture Paint

8Q	folkstone grey	+$0
91	white	+$0
98	studio white	+$0
BK	black	+$0
G1	graphite	+$0
WL	sandstone	+$0

Power/Data Module Spacer FD197.

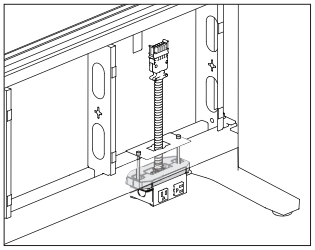

Product Information

Description

This optional spacer lowers the height of bottom-of-dock power modules to make them more accessible. Package contains 1 spacer.

Notes

For use with the following products, ordered separately:

- Power module (FD150.)
- Controlled power module (FD150M.)
- Power module - 20 amp (FD156)
- Data housing (FD159)

Dimensions

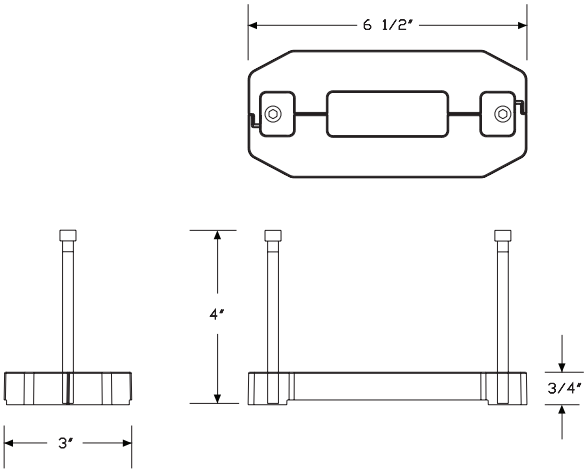

Specification Information

Step 1.

FD197.	$38

Step 2. Surface Finish

Finish		
3G	brownstone	+$0

Sand Texture Paint		
91	white	+$0
BK	black	+$0
CL	cool grey neutral	+$0
G1	graphite	+$0

Cable Manager - Dock to Surface FD199.

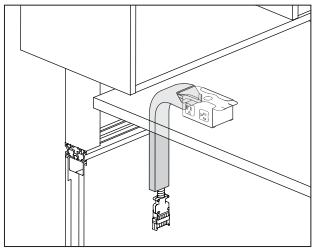

Product Information

Description

This optional cable manager routes power and data from the dock to the underside of a dock-supported work surface. Attachment hardware included.

Notes

Manages data cables and covers conduit, cables and knockout in cladding.

Specify undersurface power module (FD152.) separately.

Specify undersurface data module (FD159.02) separately.

Dimensions

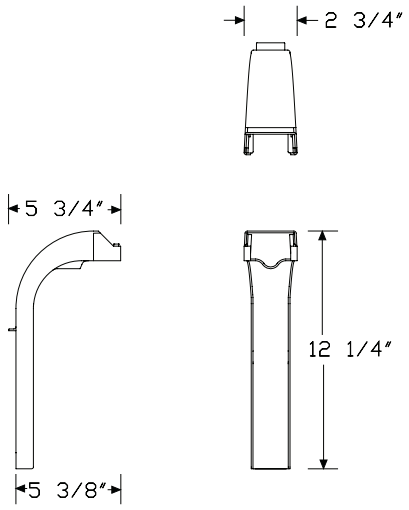

Specification Information

Step 1.

FD199. A

Step 2. Height

10	10″ high A	

Prices for Steps 1-2.

FD199. 10	$179

Step 3. Finish

3G	brownstone	+$0
8Q	folkstone grey	+$0
91	white	+$0
98	studio white	+$0
BK	black	+$0
CL	cool grey neutral	+$0
G1	graphite	+$0
WL	sandstone	+$0

Individual Bridge

FDE17.
FDS17.

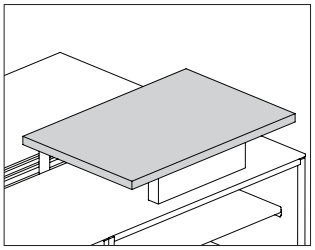

Product Information

Description

This surface spans the dock and lower storage on 1 side of the dock. It has a laminate top and thermoplastic edge, laminate top with a thermoplastic backed plywood edge, veneer top and edge, or painted Formcoat® top and edge. Laminate surfaces are 1¼″ thick. Painted Formcoat surfaces are 1″ thick. Stabilizer brackets included.

Notes

Bridge is supported by a low credenza with 4″ foot and thin top on one side of dock wall. Specify the following products separately, 1 for each side of the individual bridge:

- Surface support, low credenza, adjustable height (FT299.)
- Surface support, low credenza, fixed height (FT298.)

Power access center cutout option (CAC) accepts the Logic G1000 grommet mounted electrical distributor, 6-receptacle unit (Y1425.D or Y1425.G), ordered separately.

Dimensions

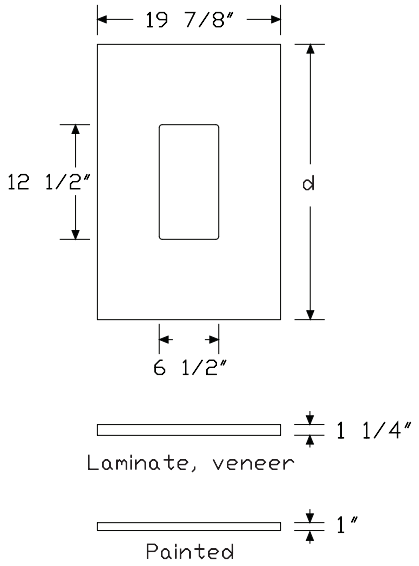

Specification Information

Step 1.

FD A

Step 2. Edge

S17. squared edge
E17. eased-edge A

Step 3. Depth

24 24″ deep
30 30″ deep

Step 4. Width

20 20″ wide

Step 5. Surface Material

For squared edge (S17.)

L high-pressure laminate top/thermoplastic edge
P painted Formcoat® top/edge A
U high-pressure laminate/universal edge

For eased-edge (E17.)

P painted Formcoat® top/edge A

Prices for Steps 1-5.

	L	P	U
FDS17. 24 20	$377	669	377
30 20	$430	700	430

	L	P	U
FDE17. 24 20	—	$749	—
30 20	—	$783	—

Step 6. Power Access Cutout

NNN	no cutout	+$0
CAC	center cutout	+$75

Step 7.

Top Finish

For high-pressure laminate top/thermoplastic edge (L) or high-pressure laminate/universal edge (U)

8Q	folkstone grey	+$0
91	white	+$0
98	studio white	+$0
CL	cool grey neutral	+$0
HF	inner tone light	+$0
LU	soft white	+$0
WL	sandstone	+$0
WN	warm grey neutral	+$0
76	light brown walnut	+$0
HM	natural maple	+$0
HP	light anigre	+$0
HX	aged cherry	+$0
LBA	clear on ash	+$0
LBR	phantom ecru	+$0
LBS	phantom cocoa	+$0
LBU	medium matte walnut	+$0
LBV	warm grey teak	+$0
LBB	oak on ash	+$0
LBC	walnut on ash	+$0
LBF	neutral twill	+$0
LBJ	graphite twill	+$0
LBQ	white twill	+$0

Top/Edge Finish: Opaque Formcoat®

For painted Formcoat® top/edge (P)

8Q	folkstone grey A	+$0
91	white A	+$0
LU	soft white A	+$0

Step 8. Edge Finish

For high-pressure laminate top/thermoplastic edge (L)

76	light brown walnut	+$0
8Q	folkstone grey	+$0
91	white	+$0
98	studio white	+$0
CL	cool grey neutral	+$0
LBA	clear on ash	+$0
LBR	phantom ecru	+$0
LBS	phantom cocoa	+$0
LBU	medium matte walnut	+$0
LBV	warm grey teak	+$0
LBB	oak on ash	+$0
LBC	walnut on ash	+$0
LBF	neutral twill	+$0
LBJ	graphite twill	+$0
LBQ	white twill	+$0
WL	sandstone	+$0
WN	warm grey neutral	+$0
HF	inner tone light	+$0
HM	natural maple	+$0
HP	light anigre	+$0
HX	aged cherry	+$0
LU	soft white	+$0

For high-pressure laminate/universal edge (U)

PLY	plywood edge	+$50

Half Bridge

FDE15.
FDS15.

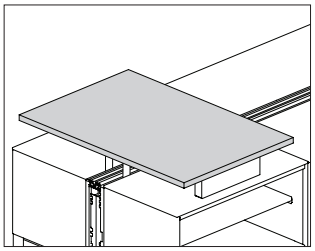

Product Information

Description

This surface spans the dock and lower storage on both sides of the dock. It has a laminate top and thermoplastic edge, laminate top with a thermoplastic backed plywood edge, veneer top and edge, or painted Formcoat® top and edge. Laminate surfaces are 1¼″ thick. Painted Formcoat surfaces are 1″ thick. Stabilizer brackets included.

Notes

Bridge is supported by a low credenza with 4″ foot and thin top on both sides of the dock wall. Specify the following products separately, 1 for each side of the half bridge:

- Surface support, low credenza, adjustable height (FT299.)
- Surface support, low credenza, fixed height (FT298.)

Power access center cutout option (CAC) accepts the Logic G1000 grommet mounted electrical distributor, 6-receptacle unit (Y1425.D or Y1425.G), ordered separately.

Dimensions

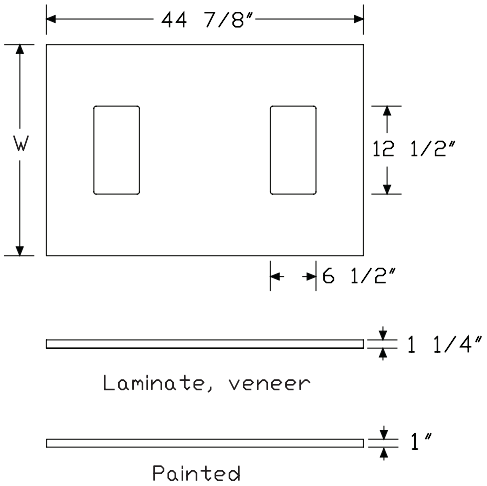

Specification Information

Step 1.

FD A

Step 2. Edge

S15. squared-edge A
E15. eased-edge A

Step 3. Depth

24 24″ deep A
30 30″ deep A

Step 4. Width

45 45″ wide A

Step 5. Surface Material

For squared-edge (S15.)

L high-pressure laminate top/thermoplastic edge A
P painted Formcoat® top/edge A
U high-pressure laminate/universal edge A

For eased-edge (E15.)

P painted Formcoat® top/edge A

Prices for Steps 1-5.

	L	P	U
FDS15. 24 45	$613	720	613
30 45	$619	818	619

	L	P	U
FDE15. 24 45	—	$848	—
30 45	—	$962	—

Step 6. Power Access Cutout

NNN	no cutout A	+$0
CAC	center cutout A	+$75

Step 7.

Top Finish

For high-pressure laminate top/thermoplastic edge (L) or high-pressure laminate/universal edge (U)

8Q	folkstone grey A	+$0
91	white A	+$0
98	studio white A	+$0
CL	cool grey neutral A	+$0
HF	inner tone light A	+$0
LU	soft white A	+$0
WL	sandstone A	+$0
WN	warm grey neutral A	+$0
76	light brown walnut A	+$0
HM	natural maple A	+$0
HP	light anigre A	+$0
HX	aged cherry A	+$0
LBA	clear on ash A	+$0
LBR	phantom ecru A	+$0
LBS	phantom cocoa A	+$0
LBU	medium matte walnut A	+$0
LBV	warm grey teak A	+$0
LBB	oak on ash A	+$0
LBC	walnut on ash A	+$0
LBF	neutral twill A	+$0
LBJ	graphite twill A	+$0
LBQ	white twill A	+$0

Top/Edge Finish: Opaque Formcoat®

For painted Formcoat® top/edge (P)

8Q	folkstone grey A	+$0
91	white A	+$0
LU	soft white A	+$0

Step 8. Edge Finish

For high-pressure laminate top/thermoplastic edge (L)

76	light brown walnut	+$0
8Q	folkstone grey	+$0
91	white	+$0
98	studio white	+$0
CL	cool grey neutral	+$0
LBA	clear on ash	+$0
LBR	phantom ecru	+$0
LBS	phantom cocoa	+$0
LBU	medium matte walnut	+$0
LBV	warm grey teak	+$0
LBB	oak on ash	+$0
LBC	walnut on ash	+$0
LBF	neutral twill	+$0
LBJ	graphite twill	+$0
LBQ	white twill	+$0
WL	sandstone	+$0
WN	warm grey neutral	+$0
HF	inner tone light	+$0
HM	natural maple	+$0
HP	light anigre	+$0
HX	aged cherry	+$0
LU	soft white	+$0

For high-pressure laminate/universal edge (U)

PLY	plywood edge	+$50

Team Bridge

FDE16.
FDS16.

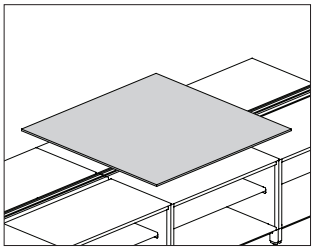

Product Information

Description

This surface spans the dock and lower storage on both sides of the dock. It has a laminate top and thermoplastic edge, laminate top with a thermoplastic backed plywood edge, veneer top and edge, or painted Formcoat® top and edge. Laminate surfaces are 1¼″ thick. Painted Formcoat surfaces are 1″ thick. Stabilizer brackets included.

Notes

Bridge is supported by a low credenza with 4″ foot and thin top on both sides of the dock wall. Specify the following products separately, 1 for each side of the team bridge:

- Surface support, low credenza, adjustable height (FT299.)
- Surface support, low credenza, fixed height (FT298.)

Dimensions

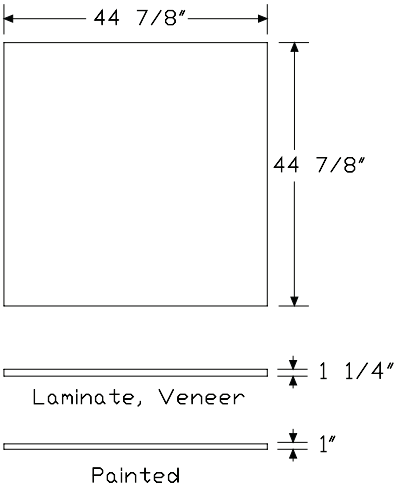

Specification Information

Step 1.

FD A

Step 2. Edge

S16. squared-edge
E16. eased-edge A

Step 3. Depth

45 45″ deep

Step 4. Width

45 45″ wide

Step 5. Surface Material

For squared-edge (S16.)

L high-pressure laminate top/thermoplastic edge
P painted Formcoat® top/edge A
U high-pressure laminate/universal edge

For eased-edge (E16.)

P painted Formcoat® top/edge A

Prices for Steps 1-5.

	L	P	U
FDS16. 45 45	$821	1182	821

	L	P	U
FDE16. 45 45	—	$1361	—

Step 6. Power Access Cutout

NNN no cutout +$0

Step 7.

Top Finish

For high-pressure laminate top/thermoplastic edge (L) or high-pressure laminate/universal edge (U)

8Q	folkstone grey	+$0
91	white	+$0
98	studio white	+$0
CL	cool grey neutral	+$0
HF	inner tone light	+$0
LU	soft white	+$0
WL	sandstone	+$0
WN	warm grey neutral	+$0
76	light brown walnut	+$0
HM	natural maple	+$0
HP	light anigre	+$0
HX	aged cherry	+$0
LBA	clear on ash	+$0
LBR	phantom ecru	+$0
LBS	phantom cocoa	+$0
LBU	medium matte walnut	+$0
LBV	warm grey teak	+$0
LBB	oak on ash	+$0
LBC	walnut on ash	+$0
LBF	neutral twill	+$0
LBJ	graphite twill	+$0
LBQ	white twill	+$0

Top/Edge Finish: Opaque Formcoat®

For painted Formcoat® top/edge (P)

8Q	folkstone grey A	+$0
91	white A	+$0
LU	soft white A	+$0

Step 8. Edge Finish

For high-pressure laminate top/thermoplastic edge (L)

76	light brown walnut	+$0
8Q	folkstone grey	+$0
91	white	+$0
98	studio white	+$0
CL	cool grey neutral	+$0
LBA	clear on ash	+$0
LBR	phantom ecru	+$0
LBS	phantom cocoa	+$0
LBU	medium matte walnut	+$0
LBV	warm grey teak	+$0
LBB	oak on ash	+$0
LBC	walnut on ash	+$0
LBF	neutral twill	+$0
LBJ	graphite twill	+$0
LBQ	white twill	+$0
WL	sandstone	+$0
WN	warm grey neutral	+$0
HF	inner tone light	+$0
HM	natural maple	+$0
HP	light anigre	+$0
HX	aged cherry	+$0
LU	soft white	+$0

For high-pressure laminate/universal edge (U)

PLY	plywood edge	+$50

Secondary Surface

FDE10.
FDS10.

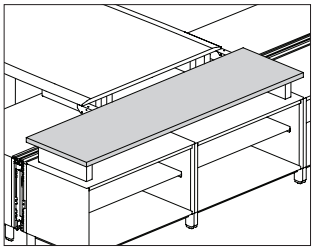

Product Information

Description

This surface spans and is supported by Canvas low storage. It has a laminate top and thermoplastic edge, laminate top with a thermoplastic backed plywood edge, veneer top and edge, or painted Formcoat® top and edge. Laminate surfaces are 1¼″ thick. Painted Formcoat surfaces are 1″ thick.

Notes

Surface is supported by a low credenza with 4″ foot and thin top. Specify 2 surface support, low credenza, adjustable height (FT299.), or 2 surface support, low credenza, fixed height (FT298.), 1 for each end of the secondary surface.

Power access cutout options (CAC, LAC, RAC) accept the Logic G1000 grommet mounted electrical distributor, 6-receptacle unit (Y1425.D or Y1425.G), ordered separately.

Dimensions

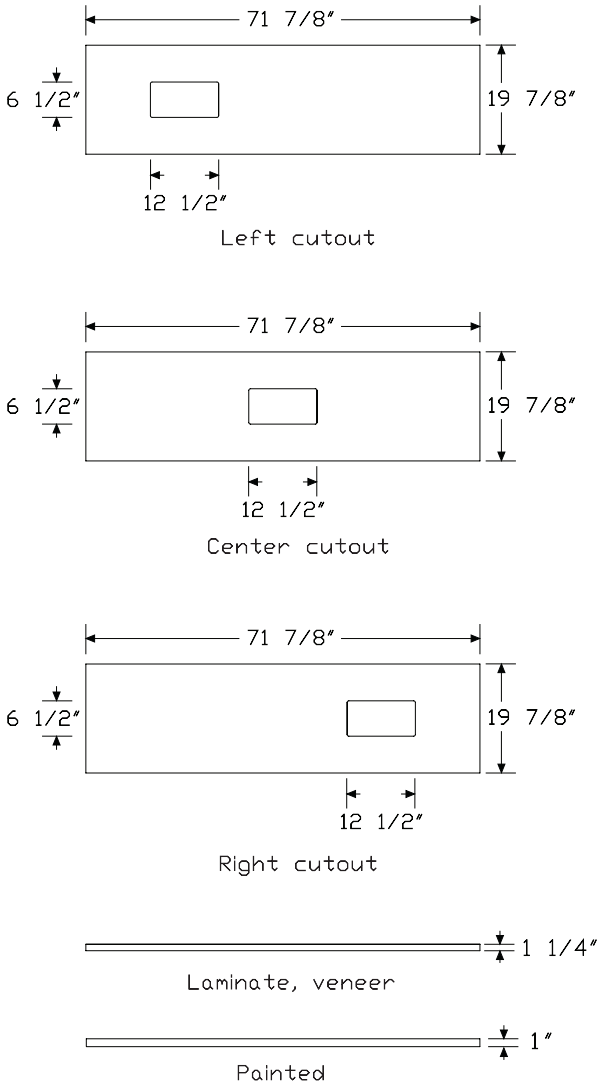

Specification Information

Step 1.

FD A

Step 2. Edge

S10. squared-edge A
E10. eased-edge A

Step 3. Depth

20 20″ deep A

Step 4. Width

36 36″ wide A
72 72″ wide A

Step 5. Surface Material

For squared-edge (S10.)

L high-pressure laminate top/thermoplastic edge A
W veneer A
P painted Formcoat® top/edge A
U high-pressure laminate/universal edge A

For eased-edge (E10.)

P painted Formcoat® top/edge A

Step 6. Attachment

S for use with low storage A

Prices for Steps 1-6.

		LS	WS	PS	US
FDS10. 20	**36**	$321	687	731	321
	72	$635	1348	1260	635
FDE10. 20	**36**	—	—	$797	—
	72	—	—	$1447	—

Step 7. Power Access Cutout

For 36″ wide (36)

NNN	no cutout	+$0
CAC	center cutout	+$75

For 72″ wide (72)

NNN	no cutout	+$0
CAC	center cutout	+$75
LAC	left cutout	+$75
RAC	right cutout	+$75

Step 8.

Top Finish

For high-pressure laminate top/thermoplastic edge (L) or high-pressure laminate/universal edge (U)

8Q	folkstone grey	+$0
91	white	+$0
98	studio white	+$0
CL	cool grey neutral	+$0
HF	inner tone light	+$0
LU	soft white	+$0
WL	sandstone	+$0
WN	warm grey neutral	+$0
76	light brown walnut	+$0
HM	natural maple	+$0
HP	light anigre	+$0
HX	aged cherry	+$0
LBA	clear on ash	+$0
LBR	phantom ecru	+$0
LBS	phantom cocoa	+$0
LBU	medium matte walnut	+$0
LBV	warm grey teak	+$0
LBB	oak on ash	+$0
LBC	walnut on ash	+$0
LBF	neutral twill	+$0
LBJ	graphite twill	+$0
LBQ	white twill	+$0

Top/Edge Finish: Wood Veneer

For veneer (W)

2U	light brown walnut A	+$85
40	dark brown walnut A	+$85
CHD	noble cherry A	+$85
ET	clear on ash A	+$85
EU	oak on ash A	+$85
EV	walnut on ash A	+$85
EW	medium matte walnut A	+$85
UL	natural maple A	+$85
WHN	natural white oak A	+$85

Top/Edge Finish: Opaque Formcoat®

For painted Formcoat® top/edge (P)

8Q	folkstone grey A	+$0
91	white A	+$0
LU	soft white A	+$0

Step 9. Edge Finish

For high-pressure laminate top/thermoplastic edge (L)

76	light brown walnut	+$0
8Q	folkstone grey	+$0
91	white	+$0
98	studio white	+$0
CL	cool grey neutral	+$0
LBA	clear on ash	+$0
LBR	phantom ecru	+$0
LBS	phantom cocoa	+$0
LBU	medium matte walnut	+$0
LBV	warm grey teak	+$0
LBB	oak on ash	+$0
LBC	walnut on ash	+$0
LBF	neutral twill	+$0
LBJ	graphite twill	+$0
LBQ	white twill	+$0
WL	sandstone	+$0
WN	warm grey neutral	+$0
HF	inner tone light	+$0
HM	natural maple	+$0
HP	light anigre	+$0
HX	aged cherry	+$0
LU	soft white	+$0

For high-pressure laminate/universal edge (U)

PLY	plywood edge	+$50

Rectangular Surface

FTE10.
FTS10.
FTT10.

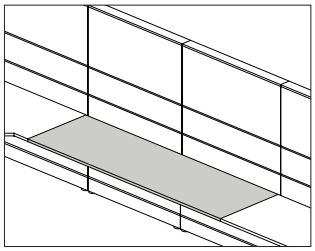

Product Information

Description

This surface hangs from a frame, wall strips, or attaches to various support components to create a freestanding rectangular desk. It has a laminate top and thermoplastic edge, laminate top with a thermoplastic backed plywood edge, veneer top and edge, or painted top and edge. Laminate and veneer surfaces are 1 1/4" thick. Painted Formcoat® surfaces are 1" thick. When hanging from a frame or wall strips there is a 1" gap at the back of the surface for standard plug head and cord passage.

Notes

MicrobeCare™ is an antimicrobial coating applied to the laminate or veneer surface of this product.

MicrobeCare™ protects products from mold, mildew, algae, and bacteria that cause deterioration, discoloration, odors, and stains.

MicrobeCare™ is registered with the US Environmental Protection Agency (EPA).

For additional size, shape, cable management, and finish options, see Vary Easy Program in Appendices.

For surface attachment bracket (D) option:

- Ganging brackets are included for using the surface as a bridge.
- Surface will only attach to front edge of squared-edge surfaces or the transition portion of the thin-edge or eased-edge surfaces.

For Canvas frame attached surface (F) option:

- Order appropriate supports separately; 2 supports are required for each surface (left and right side):
  - Open support, tapered foot, frame attached (FT294.)
  - Open support, architectural foot, frame attached (FT2A1.)
  - Support panel, tapered foot, frame attached (FT291.)
  - Universal post leg, frame attached (FT2B1.)
  - Surface cantilever (FT290.)
  - Surface support rail (FT295.)
  - Support pedestal
- Center supports are included for surfaces 54" wide and wider.

For no brackets, for freestanding or use with low credenza (S) option:

- Order the following support products separately:
  - Closed support leg (FV2E2.)
  - Open support leg, architectural foot (FV2A2.)
  - Square open support leg (FV2D2.)
  - Support leg, post (FV689.)
  - Universal post leg (FT2B2.)
  - Surface ganging bracket (FT29B.)
  - Surface support, low credenza, adjustable height (FT299.)
  - Surface support, low credenza, fixed height (FT298.)
  - Surface-attached pedestal
- When creating a freestanding desk with closed support leg (FV2E2.), a modesty panel (FV697.) is required for stability.

Thin-edge surfaces do not work with the following:

- Surface-attached pedestal
- Support pedestal
- Closed support leg (FV2E2.)
- Square open support leg (FV2D2.)

Stiffener (FV696.) is required for any laminate or veneer surface 54" wide or wider and painted formcoat surfaces 48" wide or wider that cannot use a center cantilever. See Canvas Office Landscape® Planning Guide for specific stiffener guidelines.

Dimensions

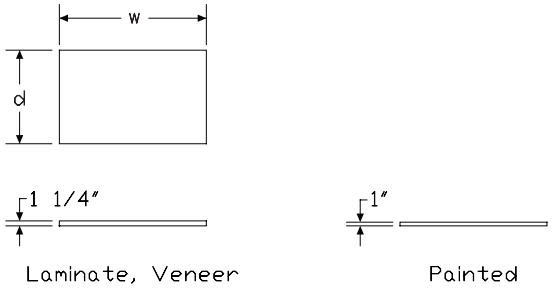

Specification Information

Step 1.

FT

Step 2. Edge

S10. squared-edge
T10. thin-edge
E10. eased-edge

Step 3. Depth

For squared-edge (S10.)

20 20″ deep
24 24″ deep
30 30″ deep
36 36″ deep

For thin-edge (T10.) or eased-edge (E10.)

24 24″ deep
30 30″ deep
36 36″ deep

Step 4. Width

For 20" deep (20), 24" deep (24), or 30" deep (30)

24 24″ wide
30 30″ wide
36 36″ wide
42 42″ wide
48 48″ wide
54 54″ wide
60 60″ wide
66 66″ wide
72 72″ wide
78 78″ wide
84 84″ wide
90 90″ wide
96 96″ wide

For 36" deep (36)

60 60″ wide A
66 66″ wide A
72 72″ wide A
78 78″ wide A
84 84″ wide A
90 90″ wide A
96 96″ wide A

Step 5. Surface Material

For squared-edge (S10.)

J thermally-fused laminate top/thermoplastic edge with MicrobeCare™ A
M thermally-fused laminate top/thermoplastic edge
T thermally-fused laminate top/universal edge A
L high-pressure laminate top/thermoplastic edge
W veneer top/veneer edge A
P painted Formcoat® top/edge
U high-pressure laminate/universal edge A
A high-pressure laminate top/thermoplastic edge with MicrobeCare™ A

For thin-edge (T10.)

L high-pressure laminate top/thermoplastic edge
W veneer top/veneer edge A
P painted Formcoat® top/edge
A high-pressure laminate top/thermoplastic edge with MicrobeCare™ A

For eased-edge (E10.)

P painted Formcoat® top/edge

Step 6. Attachment Bracket

For 20" deep (20) with 24" wide (24), 30" wide (30), 66" wide (66), 72" wide (72), 78" wide (78), 84" wide (84), 90" wide (90), or 96" wide (96)

F Canvas frame attached surface

For 20" deep (20) with 36" wide (36), 42" wide (42), 48" wide (48), 54" wide (54), or 60" wide (60)

D surface attachment bracket
F Canvas frame attached surface

For 24" deep (24) or 30" deep (30) with 24" wide (24) or 30" wide (30)

F Canvas frame attached surface
S no brackets, for freestanding or use with low credenza

For 24" deep (24) or 30" deep (30) with 36" wide (36), 42" wide (42), 48" wide (48), or 54" wide (54)

D surface attachment bracket
F Canvas frame attached surface
S no brackets, for freestanding or use with low credenza

For 24" deep (24) or 30" deep (30) with 60" wide (60)

D	surface attachment bracket
F	Canvas frame attached surface
S	no brackets, for freestanding or use with low credenza

For 24" deep (24) or 30" deep (30) with 66" wide (66), 72" wide (72), 78" wide (78), 84" wide (84), 90" wide (90), or 96" wide (96)

F	Canvas frame attached surface
S	no brackets, for freestanding or use with low credenza

For 36" deep (36) with 60" wide (60), 66" wide (66), 72" wide (72), 78" wide (78), 84" wide (84), 90" wide (90), or 96" wide (96)

S	no brackets, for freestanding or use with low credenza

Prices for Steps 1-6.

		JD	JF	JS	MD	MF	MS
FTS10. 20	**24**	—	$341	—	—	264	—
	30	—	$372	—	—	295	—
	36	$395	409	—	319	331	—
	42	$430	447	—	352	371	—
	48	$472	486	—	384	397	—
	54	$550	563	—	461	474	—
	60	$600	613	—	511	525	—
	66	—	$637	—	—	549	—
	72	—	$660	—	—	573	—
	78	—	$703	—	—	604	—
	84	—	$772	—	—	671	—
	90	—	$793	—	—	692	—
	96	—	$822	—	—	721	—
24	**24**	—	$341	277	—	264	201
	30	—	$372	313	—	295	235
	36	$395	409	349	319	331	271
	42	$430	447	384	352	371	307
	48	$479	493	433	389	404	344
	54	$550	563	503	461	474	414
	60	$606	623	545	517	533	457
	66	—	$668	601	—	579	512
	72	—	$692	625	—	603	535
	78	—	$726	659	—	627	559
	84	—	$772	721	—	671	621
	90	—	$793	728	—	692	628
	96	—	$822	730	—	721	631
30	**24**	—	$365	304	—	289	228
	30	—	$436	375	—	358	298
	36	$477	493	431	400	416	353
	42	$516	529	477	440	453	400
	48	$551	563	512	462	474	422
	54	$654	668	601	564	579	512
	60	$677	692	625	588	603	535
	66	—	$761	694	—	671	605
	72	—	$813	747	—	724	658
	78	—	$874	823	—	774	722
	84	—	$935	869	—	833	768
	90	—	$981	898	—	882	799
	96	—	$1021	932	—	919	831
36	**60**	—	—	$768	—	—	680
	66	—	—	$848	—	—	758
	72	—	—	$918	—	—	829
	78	—	—	$939	—	—	838
	84	—	—	$948	—	—	848
	90	—	—	$1004	—	—	904
	96	—	—	$1059	—	—	958

		TD	TF	TS	LD	LF	LS
FTS10. 20	**24**	—	$264	—	—	327	—
	30	—	$295	—	—	364	—
	36	$319	331	—	395	409	—
	42	$352	371	—	435	458	—
	48	$384	397	—	475	491	—
	54	$461	474	—	569	585	—
	60	$511	525	—	631	648	—
	66	—	$549	—	—	678	—
	72	—	$573	—	—	706	—
	78	—	$604	—	—	745	—
	84	—	$671	—	—	828	—
	90	—	$692	—	—	853	—
	96	—	$721	—	—	890	—

24 24	—	$264	201	—	327	249
30	—	$295	235	—	364	290
36	$319	331	271	395	409	335
42	$352	371	307	435	458	379
48	$389	404	344	480	499	425
54	$461	474	414	569	585	511
60	$517	533	457	639	658	565
66	—	$579	512	—	715	632
72	—	$603	535	—	744	661
78	—	$627	559	—	773	689
84	—	$671	621	—	828	765
90	—	$692	628	—	853	775
96	—	$721	631	—	890	778
30 24	—	$289	228	—	357	282
30	—	$358	298	—	442	368
36	$400	416	353	494	513	436
42	$440	453	400	542	559	494
48	$462	474	422	570	585	520
54	$564	579	512	696	715	632
60	$588	603	535	726	744	661
66	—	$671	605	—	828	746
72	—	$724	658	—	893	812
78	—	$774	722	—	956	891
84	—	$833	768	—	1028	948
90	—	$882	799	—	1088	985
96	—	$919	831	—	1134	1025
36 60	—	—	$680	—	—	838
66	—	—	$758	—	—	934
72	—	—	$829	—	—	1023
78	—	—	$838	—	—	1034
84	—	—	$848	—	—	1046
90	—	—	$904	—	—	1115
96	—	—	$958	—	—	1183

	WD	WF	WS	PD	PF	PS
FTS10. 20 24	—	$658	—	—	376	—
30	—	$716	—	—	422	—
36	$757	771	—	508	476	—
42	$813	829	—	545	524	—
48	$868	884	—	580	578	—
54	$1095	1113	—	732	681	—
60	$1153	1170	—	770	759	—
66	—	$1249	—	—	823	—
72	—	$1335	—	—	859	—
78	—	$1444	—	—	895	—
84	—	$1557	—	—	961	—
90	—	$1627	—	—	986	—
96	—	$1675	—	—	1028	—
24 24	—	$682	604	—	376	298
30	—	$767	689	—	422	346
36	$831	844	771	552	476	401
42	$888	903	843	591	524	448
48	$942	958	901	628	578	499
54	$1126	1145	1071	755	681	603
60	$1228	1244	1170	818	759	686
66	—	$1299	1224	—	849	771
72	—	$1357	1280	—	909	828
78	—	$1444	1380	—	944	863
84	—	$1557	1444	—	980	899
90	—	$1627	1502	—	1017	936
96	—	$1675	1563	—	1053	972
30 24	—	$758	681	—	412	334
30	—	$903	843	—	514	436
36	$942	958	901	628	593	518
42	$1000	1015	957	665	668	593
48	$1087	1103	1036	717	717	655
54	$1283	1299	1224	855	871	792
60	$1394	1425	1341	918	909	828
66	—	$1597	1514	—	956	892
72	—	$1711	1630	—	1035	970
78	—	$1816	1754	—	1104	1038
84	—	$1921	1857	—	1190	1125
90	—	$2016	1927	—	1257	1193
96	—	$2109	1996	—	1315	1252
36 60	—	—	$1645	—	—	1052
66	—	—	$1862	—	—	1124
72	—	—	$2010	—	—	1221
78	—	—	$2067	—	—	1271
84	—	—	$2121	—	—	1322
90	—	—	$2238	—	—	1399
96	—	—	$2351	—	—	1480

		UD	UF	US	AD	AF	AS
FTS10. 20	**24**	—	$327	—	—	421	—
	30	—	$364	—	—	459	—
	36	$395	409	—	488	504	—
	42	$435	458	—	531	551	—
	48	$475	491	—	583	600	—
	54	$569	585	—	679	695	—
	60	$631	648	—	740	756	—
	66	—	$678	—	—	785	—
	72	—	$706	—	—	814	—
	78	—	$745	—	—	868	—
	84	—	$828	—	—	952	—
	90	—	$853	—	—	979	—
	96	—	$890	—	—	1014	—
24	**24**	—	$327	249	—	421	342
	30	—	$364	290	—	459	386
	36	$395	409	335	488	504	431
	42	$435	458	379	531	551	475
	48	$480	499	425	591	608	534
	54	$569	585	511	679	695	621
	60	$639	658	565	747	769	672
	66	—	$715	632	—	825	741
	72	—	$744	661	—	853	771
	78	—	$773	689	—	895	813
	84	—	$828	765	—	952	890
	90	—	$853	775	—	979	899
	96	—	$890	778	—	1014	901
30	**24**	—	$357	282	—	451	376
	30	—	$442	368	—	537	462
	36	$494	513	436	589	608	532
	42	$542	559	494	638	653	589
	48	$570	585	520	680	695	632
	54	$696	715	632	808	825	741
	60	$726	744	661	835	853	771
	66	—	$828	746	—	939	855
	72	—	$893	812	—	1003	922
	78	—	$956	891	—	1078	1015
	84	—	$1028	948	—	1153	1072
	90	—	$1088	985	—	1210	1109
	96	—	$1134	1025	—	1260	1150
36	**60**	—	—	$838	—	—	948
	66	—	—	$934	—	—	1046
	72	—	—	$1023	—	—	1133
	78	—	—	$1034	—	—	1158
	84	—	—	$1046	—	—	1169
	90	—	—	$1115	—	—	1239
	96	—	—	$1183	—	—	1306

		TD	TF	TS	LD	LF	LS
FTT10. 24	**24**	—	—	—	—	$437	362
	30	—	—	—	—	$492	418
	36	—	—	—	$598	556	482
	42	—	—	—	$637	616	544
	48	—	—	—	$677	677	602
	54	—	—	—	$839	792	721
	60	—	—	—	$880	891	816
	66	—	—	—	—	$937	857
	72	—	—	—	—	$975	894
	78	—	—	—	—	$1015	949
	84	—	—	—	—	$1120	1059
	90	—	—	—	—	$1154	1091
	96	—	—	—	—	$1202	1142
30	**24**	—	—	—	—	$479	408
	30	—	—	—	—	$602	529
	36	—	—	—	$677	692	622
	42	—	—	—	$747	730	668
	48	—	—	—	$827	770	706
	54	—	—	—	$962	937	857
	60	—	—	—	$1057	994	930
	66	—	—	—	—	$1120	1056
	72	—	—	—	—	$1208	1147
	78	—	—	—	—	$1292	1229
	84	—	—	—	—	$1391	1327
	90	—	—	—	—	$1467	1404
	96	—	—	—	—	$1538	1478
36	**60**	—	—	—	—	—	$1132
	66	—	—	—	—	—	$1174
	72	—	—	—	—	—	$1225
	78	—	—	—	—	—	$1277
	84	—	—	—	—	—	$1327
	90	—	—	—	—	—	$1404
	96	—	—	—	—	—	$1484

		WD	WF	WS	PD	PF	PS
FTT10.	**24 24**	—	$872	790	—	402	327
	30	—	$984	900	—	450	375
	36	$1172	1087	1006	586	509	433
	42	$1278	1199	1117	637	564	487
	48	$1367	1284	1203	698	618	544
	54	$1559	1476	1394	803	725	651
	60	$1738	1656	1575	889	813	734
	66	—	$1845	1764	—	905	829
	72	—	$1976	1895	—	974	899
	78	—	$2084	2004	—	1062	986
	84	—	$2170	2090	—	1183	1104
	90	—	$2252	2172	—	1212	1139
	96	—	$2338	2258	—	1267	1193
	30 24	—	$970	891	—	438	361
	30	—	$1185	1103	—	552	476
	36	$1397	1328	1249	711	633	559
	42	$1480	1468	1388	793	719	640
	48	$1565	1580	1519	876	801	724
	54	$1900	1872	1791	1019	945	867
	60	$1985	2002	1921	1121	1043	968
	66	—	$2084	2004	—	1175	1098
	72	—	$2202	2133	—	1271	1197
	78	—	$2338	2270	—	1357	1286
	84	—	$2472	2403	—	1446	1367
	90	—	$2591	2524	—	1497	1418
	96	—	$2713	2644	—	1547	1467
	36 60	—	—	$2440	—	—	1206
	66	—	—	$2524	—	—	1377
	72	—	—	$2627	—	—	1502
	78	—	—	$2741	—	—	1565
	84	—	—	$2854	—	—	1627
	90	—	—	$3002	—	—	1724
	96	—	—	$3149	—	—	1780

		UD	UF	US	AD	AF	AS
FTT10.	**24 24**	—	—	—	—	$529	454
	30	—	—	—	—	$583	510
	36	—	—	—	$690	647	574
	42	—	—	—	$729	706	635
	48	—	—	—	$783	783	706
	54	—	—	—	$948	898	827
	60	—	—	—	$986	997	923
	66	—	—	—	—	$1042	962
	72	—	—	—	—	$1082	1000
	78	—	—	—	—	$1134	1067
	84	—	—	—	—	$1238	1179
	90	—	—	—	—	$1273	1210
	96	—	—	—	—	$1322	1262
	30 24	—	—	—	—	$573	498
	30	—	—	—	—	$693	621
	36	—	—	—	$769	784	716
	42	—	—	—	$837	822	760
	48	—	—	—	$931	875	813
	54	—	—	—	$1067	1042	962
	60	—	—	—	$1163	1098	1036
	66	—	—	—	—	$1225	1161
	72	—	—	—	—	$1313	1253
	78	—	—	—	—	$1411	1350
	84	—	—	—	—	$1509	1446
	90	—	—	—	—	$1588	1524
	96	—	—	—	—	$1659	1598
	36 60	—	—	—	—	—	$1238
	66	—	—	—	—	—	$1281
	72	—	—	—	—	—	$1330
	78	—	—	—	—	—	$1397
	84	—	—	—	—	—	$1446
	90	—	—	—	—	—	$1524
	96	—	—	—	—	—	$1603

		WD	WF	WS	PD	PF	PS
FTE10.	**24 24**	—	—	—	—	$415	336
	30	—	—	—	—	$469	388
	36	—	—	—	$605	525	447
	42	—	—	—	$661	581	500
	48	—	—	—	$721	641	564
	54	—	—	—	$829	750	670
	60	—	—	—	$919	842	762
	66	—	—	—	—	$938	859
	72	—	—	—	—	$1005	929
	78	—	—	—	—	$1098	1022
	84	—	—	—	—	$1221	1142
	90	—	—	—	—	$1254	1179
	96	—	—	—	—	$1307	1230
	30 24	—	—	—	—	$454	378
	30	—	—	—	—	$573	492
	36	—	—	—	$734	656	578
	42	—	—	—	$819	742	663
	48	—	—	—	$905	827	749
	54	—	—	—	$1055	975	894
	60	—	—	—	$1160	1083	1002
	66	—	—	—	—	$1217	1139
	72	—	—	—	—	$1313	1235
	78	—	—	—	—	$1396	1316
	84	—	—	—	—	$1446	1367
	90	—	—	—	—	$1497	1418
	96	—	—	—	—	$1547	1467
	36 60	—	—	—	—	—	$1250
	66	—	—	—	—	—	$1426
	72	—	—	—	—	—	$1556
	78	—	—	—	—	—	$1617
	84	—	—	—	—	—	$1679
	90	—	—	—	—	—	$1731
	96	—	—	—	—	—	$1780

Step 7.

Top Finish

For high-pressure laminate top/thermoplastic edge (L), high-pressure laminate top/thermoplastic edge with MicrobeCare™ (A), or high-pressure laminate/universal edge (U)

8Q	folkstone grey	+$0
91	white	+$0
98	studio white	+$0
CL	cool grey neutral	+$0
HF	inner tone light A	+$0
LU	soft white	+$0
WL	sandstone	+$0
WN	warm grey neutral	+$0
76	light brown walnut	+$0
HM	natural maple	+$0
HP	light anigre	+$0
HX	aged cherry	+$0
LBA	clear on ash	+$0
LBR	phantom ecru	+$0
LBS	phantom cocoa	+$0
LBU	medium matte walnut	+$0
LBV	warm grey teak	+$0
LBB	oak on ash	+$0
LBC	walnut on ash	+$0
LBF	neutral twill	+$0
LBJ	graphite twill	+$0
LBQ	white twill	+$0

Top Finish

For thermally-fused laminate top/thermoplastic edge with MicrobeCare™ (J), thermally-fused laminate top/thermoplastic edge (M), or thermally-fused laminate top/universal edge (T)

8Q	folkstone grey	+$0
91	white	+$0
98	studio white	+$0
HM	natural maple	+$0
LBA	clear on ash	+$0
LBB	oak on ash	+$0
LBC	walnut on ash	+$0
LBF	neutral twill	+$0
LBQ	white twill	+$0
LBU	medium matte walnut A	+$0

Top/Edge Finish: Wood Veneer

For veneer top/veneer edge (W)

2U	light brown walnut A	+$85
40	dark brown walnut A	+$85
CHD	noble cherry A	+$85
ET	clear on ash A	+$85
EU	oak on ash A	+$85
EV	walnut on ash A	+$85
EW	medium matte walnut A	+$85
UL	natural maple A	+$85
WHN	natural white oak A	+$85

Top/Edge Finish: Opaque Formcoat®

For painted Formcoat® top/edge (P)

8Q	folkstone grey	+$0
91	white	+$0
LU	soft white	+$0

Step 8. Edge Finish

For thermally-fused laminate top/thermoplastic edge with MicrobeCare™ (J), thermally-fused laminate top/thermoplastic edge (M), high-pressure laminate top/thermoplastic edge (L), or high-pressure laminate top/thermoplastic edge with MicrobeCare™ (A)

76	light brown walnut	+$0
8Q	folkstone grey	+$0
91	white	+$0
98	studio white	+$0
CL	cool grey neutral	+$0
LBA	clear on ash	+$0
LBR	phantom ecru	+$0
LBS	phantom cocoa	+$0
LBU	medium matte walnut	+$0
LBV	warm grey teak	+$0
LBB	oak on ash	+$0
LBC	walnut on ash	+$0
LBF	neutral twill	+$0
LBJ	graphite twill	+$0
LBQ	white twill	+$0
WL	sandstone	+$0
WN	warm grey neutral	+$0
HF	inner tone light	+$0
HM	natural maple	+$0
HP	light anigre	+$0
HX	aged cherry	+$0
LU	soft white	+$0

For thermally-fused laminate top/universal edge (T) or high-pressure laminate/universal edge (U)

PLY	plywood edge A	+$50

Dock to Surface Tethers FD290.

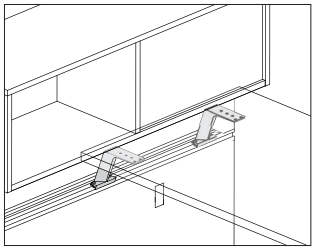

Product Information

Description

This bracket supports and attaches a work surface to the dock and positions the surface at 28½″ high. Surfaces can be placed parallel or perpendicular to the dock. Includes 1 tether and attachment hardware.

Notes

For surfaces up to and including 48″ wide, 2 tethers are required.

For surfaces 54″ wide and wider, 3 tethers are required.

Dock to surface tethers are always used in conjunction with floor supports such as the universal post leg (FT2B2., FD2B2.), ordered separately.

Dimensions

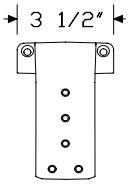

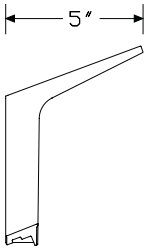

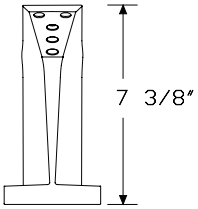

Specification Information

Step 1.

FD290. A		$157

Step 2. Surface Finish

Metallic Paint		
MS	metallic silver	+$0
SNA	satin aluminum	+$10
SNB	satin bronze	+$10
SNC	satin carbon	+$10
Sand Texture Paint		
8Q	folkstone grey	+$0
91	white	+$0
98	studio white	+$0
BK	black	+$0
G1	graphite	+$0
WL	sandstone	+$0

Surface Ganging Bracket FT29B.

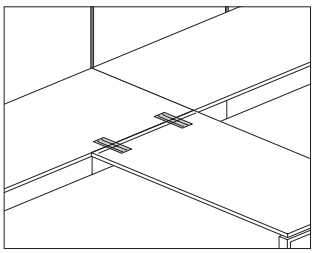

Product Information

Description

This bracket connects one side of a square-edge surface to another square-edge surface in line or at a right angle.

Notes

For freestanding surface applications, when attaching 2 rectangular surfaces perpendicular to each other or when attaching a rectangular surface perpendicular to the squared-edge portion of a rectangular transition surface specify the pair version (FT29B.2).

When attaching freestanding surfaces next to each other in a straight line with a shared leg supporting the back portion of the surfaces, specify the single version (FT29B.1).

Dimensions

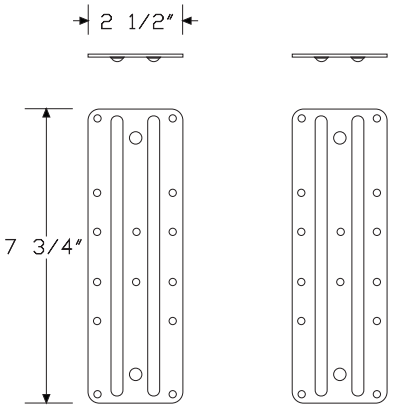

Specification Information

Step 1.

FT29B.

Step 2. Type

1	single
2	pair

Prices for Steps 1-2.

FT29B.	**1**	$35
	2	$61

Universal Post Leg FT2B2.

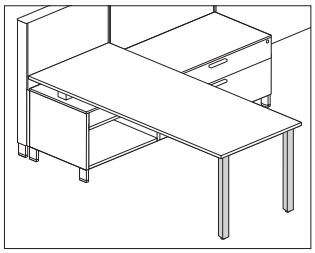

Product Information

Description

This leg is available as a single leg to support 1 corner of a surface, or as a pair to support 1 end of a surface. The fixed-height leg has a 2″ leveling range, allowing a surface height of 28½″-30½″. The adjustable-height leg is adjustable over a 6″ range, allowing a surface height of 25½″-31½″. Attachment hardware included.

Dimensions

Fixed Height

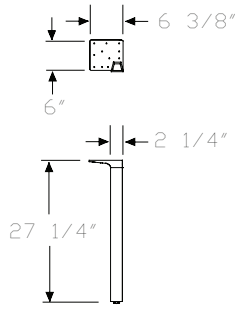

Adjustable Height

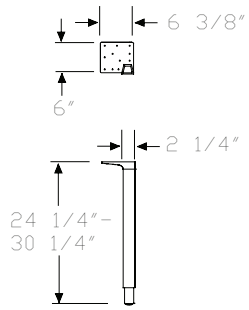

Specification Information

Step 1.

FT2B2.

Step 2. Leg Type

F	fixed height
A	adjustable height

Step 3. Position

L	left-hand, single leg
R	right-hand, single leg
P	left-hand & right-hand, pair

Prices for Steps 1-3.

		L	R	P
FT2B2.	**F**	$549	549	1088
	A	$586	586	1167

Step 4. Leg Body Finish

Sand Texture Paint

For left-hand, single leg (L) or right-hand, single leg (R)

8Q	folkstone grey	+$0
91	white	+$0
98	studio white	+$0
BK	black	+$0
G1	graphite	+$0
WL	sandstone	+$0

Metallic Paint

For left-hand, single leg (L) or right-hand, single leg (R)

MS	metallic silver	+$0

Sand Texture Paint

For left-hand & right-hand, pair (P)

8Q	folkstone grey A	+$0
91	white A	+$0
98	studio white A	+$0
BK	black A	+$0
G1	graphite A	+$0
WL	sandstone A	+$0

Metallic Paint

For left-hand & right-hand, pair (P)

MS	metallic silver	+$0
SNA	satin aluminum	+$10
SNB	satin bronze	+$10
SNC	satin carbon	+$10

Step 5. Leg Face Finish

Sand Texture Paint

For left-hand, single leg (L) or right-hand, single leg (R)

BK	black	+$0

Smooth Paint

For left-hand, single leg (L) or right-hand, single leg (R)

8Q	folkstone grey	+$0
91	white	+$0
98	studio white	+$0
G2	graphite satin	+$0
WL	sandstone	+$0

Metallic Paint

For left-hand, single leg (L) or right-hand, single leg (R)

MS	metallic silver	+$0

Anodized

For left-hand, single leg (L) or right-hand, single leg (R)

AN	clear anodized aluminum	+$10

Sand Texture Paint

For left-hand & right-hand, pair (P)

BK	black	+$0

Smooth Paint

For left-hand & right-hand, pair (P)

8Q	folkstone grey	+$0
91	white	+$0
98	studio white	+$0
G2	graphite satin	+$0
WL	sandstone	+$0

Metallic Paint

For left-hand & right-hand, pair (P)

MS	metallic silver	+$0
SNA	satin aluminum	+$10
SNB	satin bronze	+$10
SNC	satin carbon	+$10

Anodized

For left-hand & right-hand, pair (P)

AN	clear anodized aluminum	+$20

Universal Post Leg, Shared FD2B2.

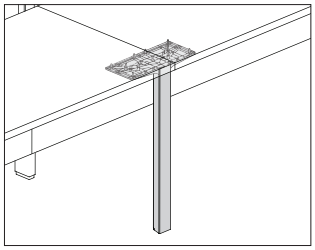

Product Information

Description

This single leg supports the front corner edges of 2 adjacent surfaces. It has 2″ of leveling adjustment. Attachment hardware included.

Dimensions

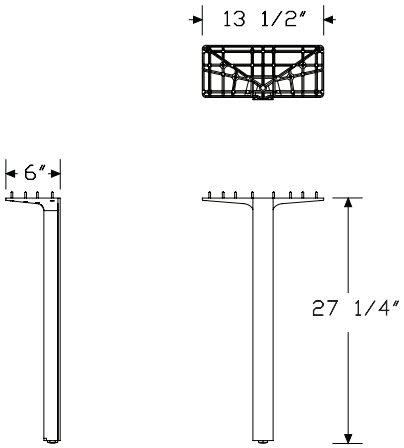

Specification Information

Step 1.

FD2B2. A

Step 2. Leg Type

F	fixed height	

Step 3. Position

S	shared, single leg	

Prices for Steps 1-3.

		S
FD2B2. F		$722

Step 4. Leg Body Finish

Metallic Paint

SNA	satin aluminum	+$10
SNB	satin bronze	+$10
SNC	satin carbon	+$10
MS	metallic silver	+$0

Sand Texture Paint

91	white	+$0
BK	black	+$0
G1	graphite	+$0

Step 5. Leg Face Finish

Sand Texture Paint

BK	black	+$0

Smooth Paint

8Q	folkstone grey	+$0
91	white	+$0
98	studio white	+$0
G2	graphite satin	+$0
WL	sandstone	+$0

Metallic Paint

MS	metallic silver	+$0

Anodized

AN	clear anodized aluminum	+$10

Support Leg, Post FV689.

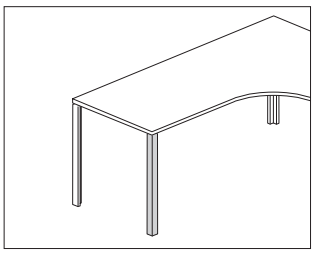

Product Information

Description

This single painted leg supports a desk or return and includes a glide with 1½" leveling range. Specify 2 legs to support one end of a surface. Attachment hardware included.

Dimensions

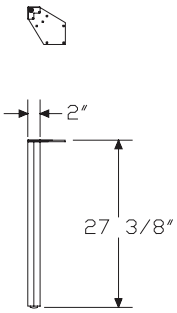

Specification Information

Step 1.

FV689.P	$231

Step 2. Surface Finish

Sand Texture Paint

8Q	folkstone grey	+$0
91	white	+$0
98	studio white	+$0
BK	black	+$0
CL	cool grey neutral	+$0
G1	graphite	+$0
WL	sandstone	+$0
WN	warm grey neutral	+$0

Metallic Paint

CN	metallic champagne	+$0
EH	metallic bronze	+$0
MS	metallic silver	+$0
SNA	satin aluminum	+$10
SNB	satin bronze	+$10
SNC	satin carbon	+$10

Column Kit, Dock Peninsula Surface FD235.

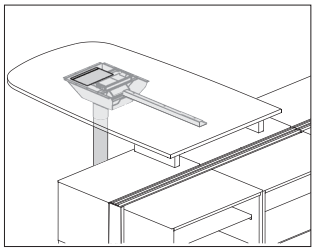

Product Information

Description

This column kit attaches to and supports the end of a peninsula surface. It has a 10′ power cord with 3-prong plug end. Column kit includes a grommet and technology well that has 2 power receptacles and 2 data openings. Glides allow 2″ of leveling adjustment.

Notes

When hardwiring is required, specify powered (P) option for power/data access.

Dimensions

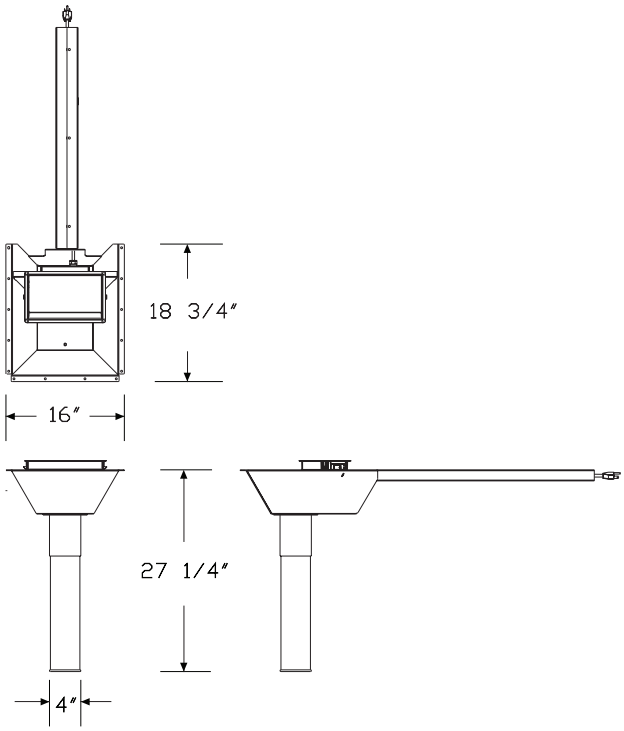

Specification Information

Step 1.

FD235. A

Step 2. Application

DS	dock supported - Canvas dock
SS	storage supported - Canvas credenza

Step 3. Power/Data Access

A	modular power cord w/ plug end
P	conduit with open end for hardwiring

Prices for Steps 1-3.

		A	P
FD235. DS		$3352	3352
	SS	$3352	3352

Step 4. Grommet Finish

91	white	+$0
98	studio white	+$0
BK	black	+$0
G1	graphite	+$0
MS	metallic silver	+$0

Step 5. Column/Bin Finish

Sand Texture Paint

8Q	folkstone grey	+$0
91	white	+$0
98	studio white	+$0
BK	black	+$0
CL	cool grey neutral	+$0
G1	graphite	+$0
WL	sandstone	+$0
WN	warm grey neutral	+$0

Metallic Paint

CN	metallic champagne	+$0
EH	metallic bronze	+$0
MS	metallic silver	+$0
SNA	satin aluminum	+$10
SNB	satin bronze	+$10
SNC	satin carbon	+$10

Square Open Support Leg FV2D2.

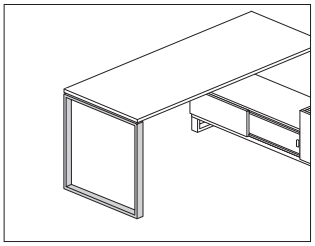

Product Information

Description

This individual leg supports 1 end of a surface or joins 2 surfaces end-to-end, providing shared support at the surface joint. It has leveling glides with 1½″ of adjustment. Attachment hardware included.

Notes

When leg is supporting the end of a squared- or eased-edge surface, depth of support leg must match depth of surface. Support leg does not work with thin-edge surfaces in this position.

When leg is supporting the joint between 2 surfaces, specify leg as follows:

Surface Depth—Leg Depth
24″ deep surface—12″ deep leg
30″ deep surface—24″ deep leg
36″ deep surface—24″ deep leg

Dimensions

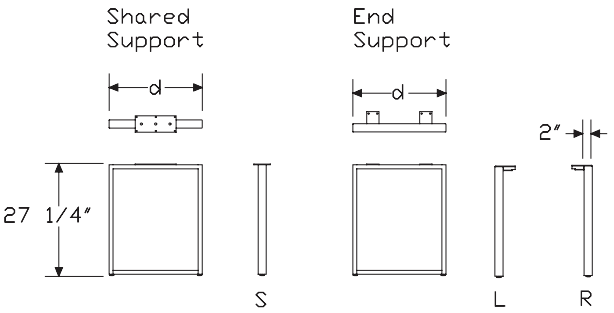

Specification Information

Step 1.

FV2D2.

Step 2. Surface Edge Type

S	for squared edge surface

Step 3. Depth

2A	12″ deep, shared
2B	24″ deep, shared
24	24″ deep
30	30″ deep
36	36″ deep

Step 4. Leg Type

F	fixed height

Step 5. Position

For 12″ deep, shared (2A) or 24″ deep, shared (2B)

S	shared

For 24″ deep (24), 30″ deep (30), or 36″ deep (36)

L	left
R	right

Prices for Steps 1-5.

		FL	FS	FR
FV2D2. S	**2A**	—	$309	—
	2B	—	$473	—
	24	$473	—	473
	30	$489	—	489
	36	$500	—	500

Step 6. Surface Finish

Sand Texture Paint

8Q	folkstone grey	+$0
91	white	+$0
98	studio white	+$0
BK	black	+$0
CL	cool grey neutral	+$0
G1	graphite	+$0
WL	sandstone	+$0
WN	warm grey neutral	+$0

Metallic Paint		
CN	metallic champagne	+$0
EH	metallic bronze	+$0
MS	metallic silver	+$0
SNA	satin aluminum	+$10
SNB	satin bronze	+$10
SNC	satin carbon	+$10

Open Support Leg, Architectural Foot FV2A2.

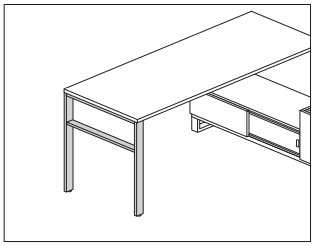

Product Information

Description

This individual leg supports 1 end of a surface or joins 2 surfaces end-to-end, providing shared support at the surface joint. The fixed height leg has a 2″ leveling range allowing a surface height of 28½″-30½″. The adjustable height leg has a 6″ adjustment range in 1″ increments allowing a surface height of 25½″-31½″. Attachment hardware included.

Notes

When leg is supporting the end of a surface, depth of support leg must match depth of surface.

When leg is supporting the joint between 2 surfaces, specify leg as follows:

Surface Depth—Leg Depth
24″ deep surface—12″ deep leg
30″ deep surface—24″ deep leg
36″ deep surface—24″ deep leg

Dimensions

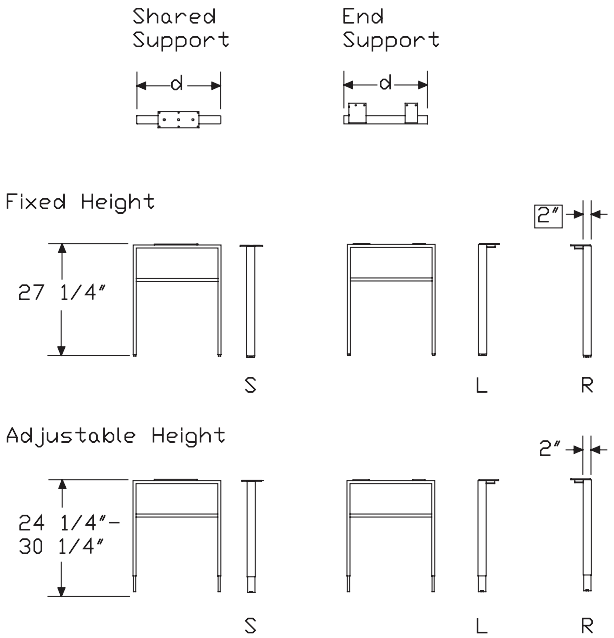

Specification Information

Step 1.

FV2A2.

Step 2. Depth

2A	12″ deep, shared
2B	24″ deep, shared
24	24″ deep
30	30″ deep
36	36″ deep

Step 3. Leg Type

F	fixed height
A	adjustable height

Step 4. Position

For 12″ deep, shared (2A) or 24″ deep, shared (2B)

S	shared

For 24″ deep (24), 30″ deep (30), or 36″ deep (36)

L	left
R	right

Prices for Steps 1-4.

			L	S	R
FV2A2.	**2A**	**F**	—	$377	—
		A	—	$497	—
	2B	**F**	—	$616	—
		A	—	$735	—
	24	**F**	$616	—	616
		A	$735	—	735
	30	**F**	$646	—	646
		A	$769	—	769
	36	**F**	$678	—	678
		A	$801	—	801

Open Support Leg, Architectural Foot *continued*

Step 5. Surface Finish		
Sand Texture Paint		
8Q	folkstone grey	+$0
91	white	+$0
98	studio white	+$0
BK	black	+$0
CL	cool grey neutral	+$0
G1	graphite	+$0
WL	sandstone	+$0
WN	warm grey neutral	+$0
Metallic Paint		
SNA	satin aluminum	+$10
SNB	satin bronze	+$10
SNC	satin carbon	+$10
CN	metallic champagne	+$0
EH	metallic bronze	+$0
MS	metallic silver	+$0

Closed Support Leg FV2E2.

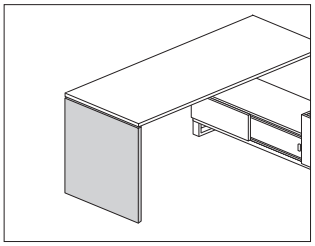

Product Information

Description

This individual solid panel leg supports 1 end of a surface or joins 2 surfaces end-to-end, providing shared support at the surface joint. It is available as laminate or veneer and has leveling glides with 1 1/2″ of adjustment. Attachment hardware included.

Notes

For additional product options, see Vary Easy Program in Appendices.

Grain direction is vertical on wood-grain laminate and veneer.

When leg is supporting the end of a squared- or eased-edge surface, depth of support leg must match depth of surface. Support leg does not work with thin-edge surfaces in this position.

When leg is supporting the joint between 2 surfaces, specify leg as follows:

Surface Depth—Leg Depth
24″ deep surface—12″ deep leg
30″ deep surface—24″ deep leg
36″ deep surface—24″ deep leg

Dimensions

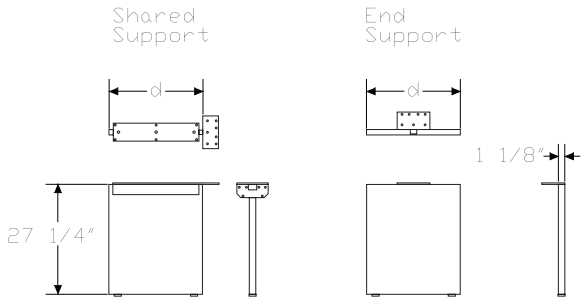

Specification Information

Step 1.

FV2E2.

Step 2. Surface Edge Type

S	for squared edge surface

Step 3. Depth

2A	12″ deep, shared
2B	24″ deep, shared
24	24″ deep
30	30″ deep
36	36″ deep

Step 4. Leg Type

F	fixed height

Step 5. Surface Material

H	high-pressure laminate with thermoplastic edge A
L	thermally-fused laminate with thermoplastic edge
W	veneer A

Prices for Steps 1-5.

		FH	FL	FW
FV2E2. S	**2A**	$312	249	643
	2B	$509	407	843
	24	$509	407	843
	30	$519	416	868
	36	$530	423	1136

Step 6. Surface Finish

Solid-Color Laminate

For thermally-fused laminate with thermoplastic edge (L)

8Q	folkstone grey	+$0
91	white	+$0
98	studio white	+$0
CL	cool grey neutral	+$0
LU	soft white	+$0
WL	sandstone	+$0
WN	warm grey neutral	+$0

Twill Laminate

For thermally-fused laminate with thermoplastic edge (L)

LBF	neutral twill	+$0
LBJ	graphite twill	+$0
LBQ	white twill	+$0

Wood-Grain Laminate

For thermally-fused laminate with thermoplastic edge (L)

HM	natural maple	+$0
HP	light anigre	+$0
LBA	clear on ash	+$0
LBR	phantom ecru	+$0
LBS	phantom cocoa	+$0
LBU	medium matte walnut	+$0
LBV	warm grey teak	+$0
LBB	oak on ash	+$0
LBC	walnut on ash	+$0
76	light brown walnut	+$0
HX	aged cherry	+$0

For high-pressure laminate with thermoplastic edge (H)

76	light brown walnut	+$0
8Q	folkstone grey	+$0
91	white	+$0
98	studio white	+$0
CL	cool grey neutral	+$0
HF	inner tone light	+$0
HM	natural maple	+$0
HP	light anigre	+$0
HX	aged cherry	+$0
LBA	clear on ash	+$0
LBB	oak on ash	+$0
LBC	walnut on ash	+$0
LBF	neutral twill	+$0
LBJ	graphite twill	+$0
LBQ	white twill	+$0
LBR	phantom ecru A	+$0
LBS	phantom cocoa A	+$0
LBU	medium matte walnut A	+$0
LBV	warm grey teak A	+$0
LT	light tone	+$0
LU	soft white	+$0
OG	honey maple A	+$0
WL	sandstone	+$0
WN	warm grey neutral	+$0

Wood Veneer

For veneer (W)

2U	light brown walnut A	+$85
40	dark brown walnut A	+$85
EW	medium matte walnut A	+$85
ET	clear on ash A	+$85
EU	oak on ash A	+$85
EV	walnut on ash A	+$85
UL	natural maple A	+$85

Surface Support, Low Credenza, Fixed Height

FT298.

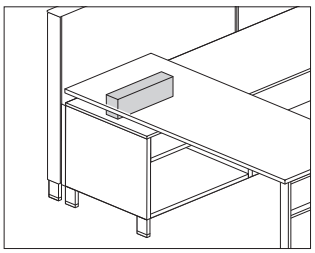

Product Information

Description

This support allows a low credenza to support 1 end of a surface and places the surface at 28 1/2" high. Attachment hardware included.

Notes

Support heights are:

- 5 1/8" high for storage type (M)
- 6 7/8" high for storage type (S)

Dimensions

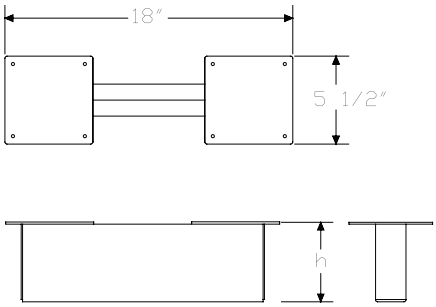

Specification Information

Step 1.

FT298.

Step 2. Storage Type

M	for use with thin top low credenza with 4" high foot
S	for use with thin top low credenza with 2 1/4" high base

Prices for Steps 1-2.

FT298.	**M**	$272
	S	$272

Step 3. Surface Finish

Sand Texture Paint

91	white A	+$0
CL	cool grey neutral A	+$0
G1	graphite A	+$0
WN	warm grey neutral A	+$0
8Q	folkstone grey A	+$0
98	studio white A	+$0
WL	sandstone A	+$0

Metallic Paint

CN	metallic champagne	+$0
EH	metallic bronze	+$0
MS	metallic silver	+$0
SNA	satin aluminum	+$10
SNB	satin bronze	+$10
SNC	satin carbon	+$10

Surface Support, Low Credenza, Adjustable Height FT299.

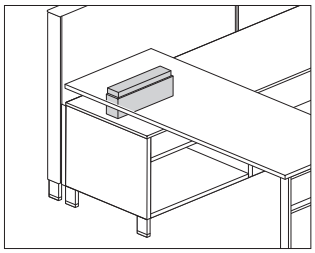

Product Information

Description

This height-adjustable support allows a low credenza to support 1 end of a surface, and provides 3″ of height adjustment for the surface. Attachment hardware included.

Notes

In lowest position, the height of supports is as follows:

- 3⅝″ high for storage type (M)
- 5⅜″ high for storage type (S)

When used with low credenza with ⅜″ thin top, surface adjustment height range is 27″ - 30″.

When used with low credenza with 1¼″ thick top, surface adjustment height range is 27⅝″ - 30⅝″.

Dimensions

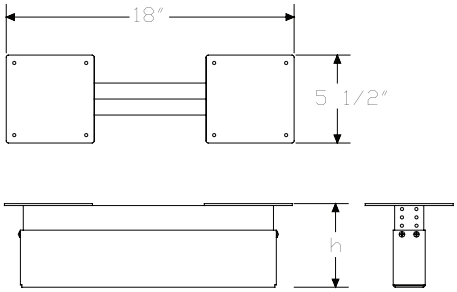

Specification Information

Step 1.

FT299.

Step 2. Storage Type

M	for use with low credenza with 4″ high foot
S	for use with low credenza with 2¼″ high base

Prices for Steps 1-2.

FT299.	**M**	$453
	S	$453

Step 3. Surface Finish

Sand Texture Paint

8Q	folkstone grey	+$0
91	white	+$0
98	studio white	+$0
CL	cool grey neutral	+$0
G1	graphite	+$0
WL	sandstone	+$0
WN	warm grey neutral	+$0

Metallic Paint

CN	metallic champagne	+$0
EH	metallic bronze	+$0
MS	metallic silver	+$0
SNA	satin aluminum	+$10
SNB	satin bronze	+$10
SNC	satin carbon	+$10

Fixed Surface Support, Low Credenza, Power Chase

FV298.

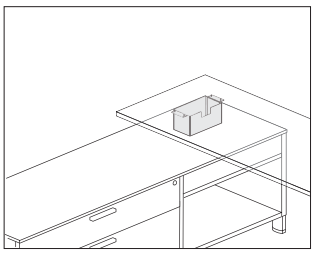

Product Information

Description

This power chase support allows a low credenza to support 1 end of a surface and places the surface at 28½″ high. The support is open to allow cords to route from surface through top of credenza and through to wall. Attachment hardware included.

Notes

Support heights:

Storage Type—Height

M—5⅛″

S—6⅞″

R—6″

W—4¼″

For use with wood low credenza, open with drawers, power access (FFV73.), ordered separately.

Support is sized for the 6-module Logic G1000 grommet mounted electrical distributor (Y1425.D or .G).

Dimensions

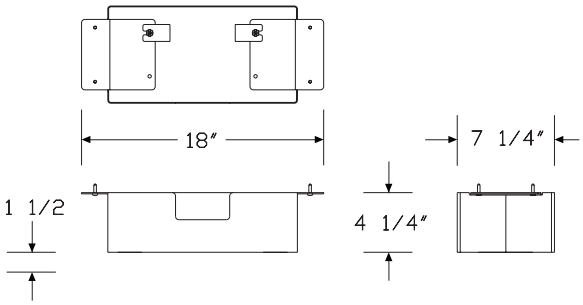

W – 1 1/4″ top, 4″ high foot

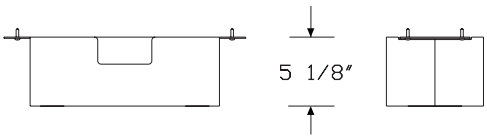

M – Thin top, 4″ high foot

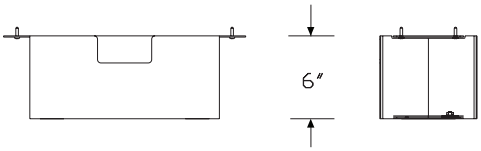

R – 1 1/4″ top, 2 1/4″ high foot

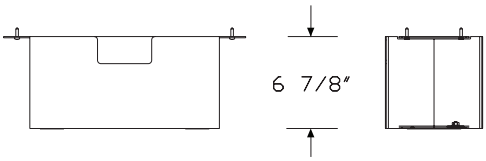

S – Thin top, 2 1/4″ high foot

Fixed Surface Support, Low Credenza, Power Chase *continued*

Specification Information	
Step 1.	
FV298. A	

Step 2. Storage Type		
M	for use with thin top low credenza with 4" high foot A	
S	for use with thin top low credenza with 2¼" high base A	
R	for use with 1¼" top low credenza with 2¼" high base A	
W	for use with 1¼" top low credenza with 4" high foot A	

Prices for Steps 1-2.		
FV298.	**M**	$381
	S	$381
	R	$381
	W	$381

Step 3. Surface Finish		
BK	black A	+$0
8Q	folkstone grey A	+$0
91	white A	+$0
98	studio white A	+$0
CL	cool grey neutral A	+$0
CN	metallic champagne A	+$0
EH	metallic bronze A	+$0
G1	graphite A	+$0
MS	metallic silver A	+$0
WL	sandstone A	+$0
WN	warm grey neutral A	+$0

Metallic Paint		
SNA	satin aluminum A	+$10
SNB	satin bronze A	+$10
SNC	satin carbon A	+$10

Stiffener FV696.

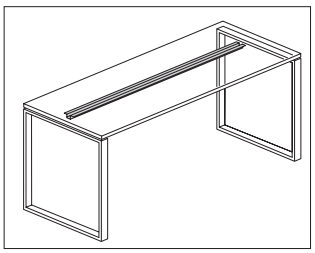

Product Information

Description

This stiffener is used to add additional stiffness to a Canvas freestanding surface, Canvas or Ethospace® surface-attached surface, peninsula or any frame-attached surface when a center cantilever cannot be used. Attachment hardware included.

Notes

Canvas and Ethospace laminate or veneer surfaces 54″ wide or wider and painted formcoat surfaces 48″ wide or wider that cannot use a center cantilever require stiffener(s).

See Canvas Office Landscape® Planning Guide or Ethospace Work Surface Planning Guide for specific stiffener guidelines.

Stiffener hangs below surface and is 1 1/4″ high.

Dimensions

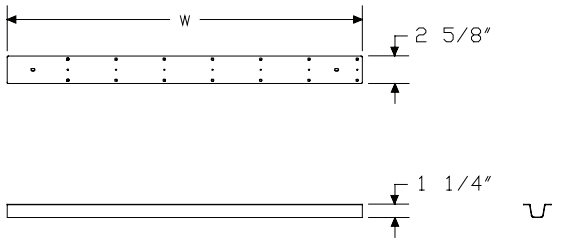

Specification Information

Step 1.

FV696.

Step 2. Width

34	33 7/8″ wide
39	38 5/8″ wide
43	43 1/4″ wide
48	48″ wide
57	57 3/8″ wide
62	62 1/8″ wide
67	66 3/4″ wide
71	71 1/2″ wide
81	80 7/8″ wide

Prices for Steps 1-2.

FV696.	**34**	$97
	39	$99
	43	$99
	48	$99
	57	$99
	62	$99
	67	$99
	71	$99
	81	$99

Cable Manager FV695.

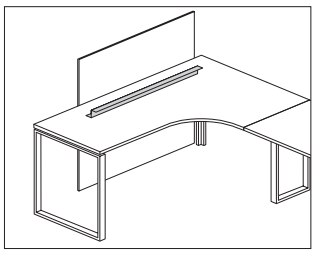

Product Information

Description

This cable manager attaches beneath a surface to provide routing of cables and cords at the back edge of a desk or return. Attachment hardware included.

Notes

When using cable manager with privacy panel or screen, specify cable manager width 12″ less than privacy panel or screen width.

Dimensions

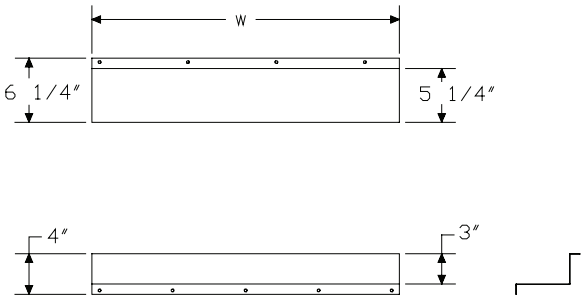

Specification Information

Step 1.

FV695.

Step 2. Width

18	18″ wide
24	24″ wide
30	30″ wide
36	36″ wide
42	42″ wide
48	48″ wide

Prices for Steps 1-2.

FV695.	**18**	$105
	24	$111
	30	$121
	36	$128
	42	$139
	48	$151

Step 3. Surface Finish

Sand Texture Paint

8Q	folkstone grey	+$0
91	white	+$0
98	studio white	+$0
BK	black	+$0
CL	cool grey neutral	+$0
G1	graphite	+$0
WL	sandstone	+$0
WN	warm grey neutral	+$0

Metallic Paint

CN	metallic champagne	+$0
EH	metallic bronze	+$0
MS	metallic silver	+$0
SNA	satin aluminum	+$10
SNB	satin bronze	+$10
SNC	satin carbon	+$10

Cable Management Trough FT199.

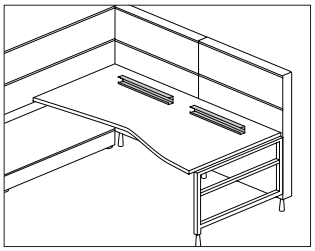

Product Information

Description

This trough attaches along the underside of a Canvas surface to hold and manage power/data cables. It includes two 14″-wide troughs. Finish is black. Attachment hardware is included.

Dimensions

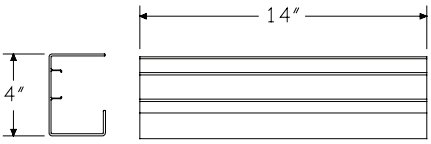

Specification Information

Step 1.

FT199.	$99

Cable Management Channel FT19C.

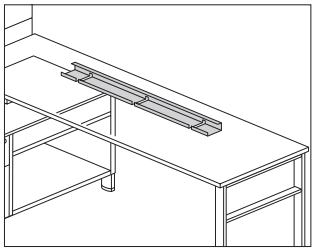

Product Information

Description

This channel attaches to the underside of a surface to hold and manage cords and cables. Attachment hardware included.

Dimensions

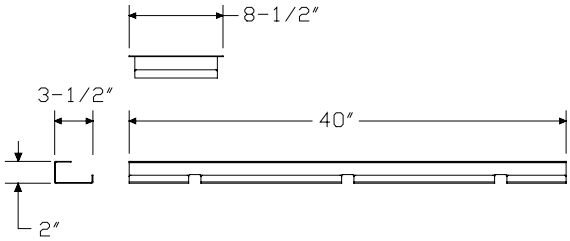

Specification Information

Step 1.

FT19C. A

Step 2. Width

08 8″ wide A

40 40″ wide A

Prices for Steps 1-2.

FT19C.	**08**	$60
	40	$106

Cord Cleat G1331.

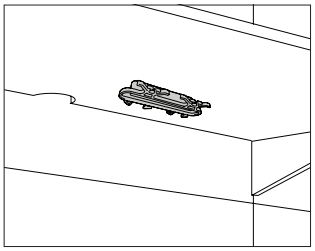

Product Information

Description

This cleat attaches to the underside of a work surface or table to manage cords and cables. Finish is cool grey neutral. Package contains 2.

Dimensions

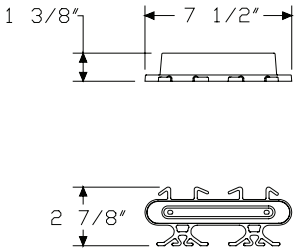

Specification Information

Step 1.

G1331.	$33

Vertical Cable Manager FV698.

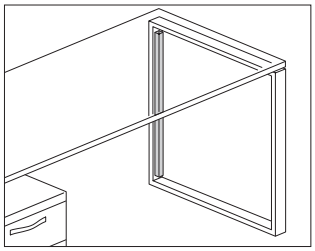

Product Information

Description

This plastic cable manager adheres with double-sided tape to a desk leg to route cords and cables from the floor to the surface. Package of 6.

Dimensions

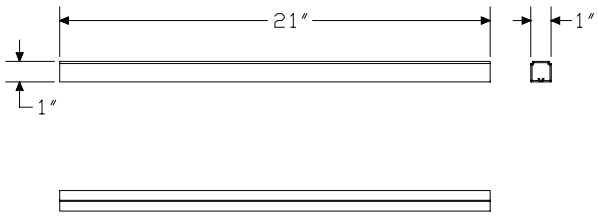

Specification Information

Step 1.

FV698.21	$96

Step 2. Surface Finish

3G	brownstone	+$0
8Q	folkstone grey	+$0
91	white	+$0
98	studio white	+$0
BK	black	+$0
CL	cool grey neutral	+$0
G2	graphite satin	+$0
WL	sandstone	+$0
WN	warm grey neutral	+$0

Grommet Kit, Surface FV982.

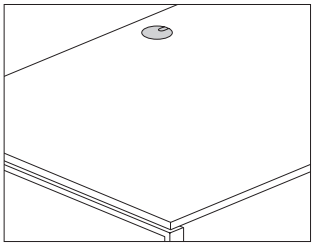

Product Information

Description

This grommet kit allows cords and cables to be routed through a surface. Includes a template for proper placement. Package of 6.

Notes

Grommet kit requires field-drilling of surface.

Dimensions

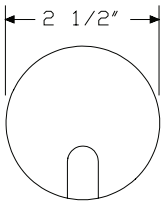

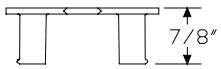

Specification Information

Step 1.

FV982.	$53

Step 2. Grommet Finish

3G	brownstone	+$0
8Q	folkstone grey	+$0
91	white	+$0
98	studio white	+$0
BK	black	+$0
CL	cool grey neutral	+$0
G2	graphite satin	+$0
LU	soft white	+$0
MT	medium tone	+$0
WL	sandstone	+$0
WN	warm grey neutral	+$0

Storage Cabinet, Dock Mounted, Open FD415.

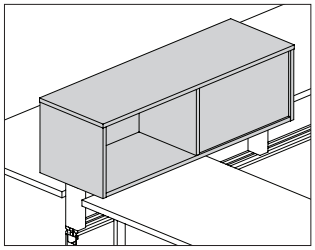

Product Information

Description

This cabinet has a laminate or veneer surface and mounts to the top rail of a Canvas dock to provide storage on 1 or both sides.

Notes

Double-sided (D) provides storage access on both sides of the cabinet, allowing half of the storage to be accessed from each side of the dock wall.

Single-sided (S) provides storage access on 1 side only.

Order stanchion support for center mount (FD417.) or offset mount (FD419.) separately.

Order optional accessories separately:

- Marker board (FT492.)
- Tackboard (FT491.)

To create a perpendicular application, order perpendicular upper storage stanchion support (FD418.) and storage support leg (FD295.) separately. Storage unit must be specified as center mount (FD415. xxxxC) attachment.

Dimensions

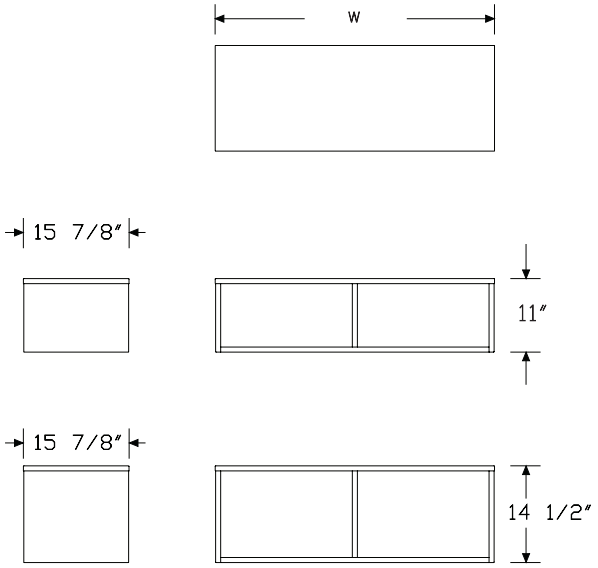

Specification Information

Step 1.

FD415. A

Step 2. Height

11	11″ high
15	15″ high

Step 3. Width

36	36″ wide
42	42″ wide
48	48″ wide
60	60″ wide
72	72″ wide

Step 4. Attachment

C	center mount
F	offset

Step 5. Storage Type

For center mount (C)

D	double-sided
S	single-sided

For offset (F)

S	single-sided

Step 6. Position

For double-sided (D)

L	opening left
R	opening right

For single-sided (S)

S	opening left and right

Step 7. Surface Material

L	thermally-fused laminate

Prices for Steps 1-7.

		CDLL	CDRL	CSSL	FSSL
FD415. 11	**36**	$1243	1243	1243	1243
	42	$1352	1352	1352	1352
	48	$1459	1459	1459	1459
	60	$1624	1624	1624	1624
	72	$1788	1788	1788	1788

Storage Cabinet, Dock Mounted, Open *continued*

15	**36**	$1299	1299	1299	1299
	42	$1430	1430	1430	1430
	48	$1559	1559	1559	1559
	60	$1750	1750	1750	1750
	72	$1944	1944	1944	1944

Step 8. Top/Edge Finish

Solid-Color Laminate

8Q	folkstone grey	+$0
91	white	+$0
98	studio white	+$0
CL	cool grey neutral	+$0
LU	soft white	+$0
WL	sandstone	+$0
WN	warm grey neutral	+$0
LBF	neutral twill	+$0
LBJ	graphite twill	+$0
LBQ	white twill	+$0

Wood-Grain Laminate

76	light brown walnut	+$0
HM	natural maple	+$0
HP	light anigre	+$0
HX	aged cherry	+$0
LBA	clear on ash	+$0
LBR	phantom ecru	+$0
LBS	phantom cocoa	+$0
LBU	medium matte walnut	+$0
LBV	warm grey teak	+$0
LBB	oak on ash	+$0
LBC	walnut on ash	+$0

Tackboard, Storage Cabinet, Frame Top Mounted FT491.

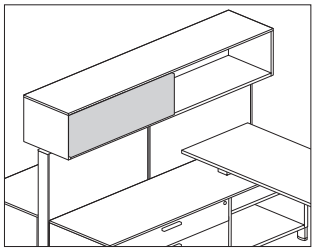

Product Information

Description

This tackboard attaches to 1 side of a double-sided frame top mounted storage cabinet to provide a tackable surface. Attachment hardware included.

Notes

Specify tackboard width 1/2 the width of the storage cabinet.

Attaches to back of unit or to interior of open storage cabinet (FT415.).

Tackboard accepts Customer's Own Material (COM). Yardage is estimated for directional, 54"-wide fabrics.

For tackable fabric option (T)

Width—Yardage

All widths—.61

For tackable fabric, horizontal (R)

Width—Yardage

18—.72

21—.80

24—.88

30—1.05

36—1.22

For information on multiple quantities or nondirectional fabrics, contact COM Department. See Order Information in Appendices.

Dimensions

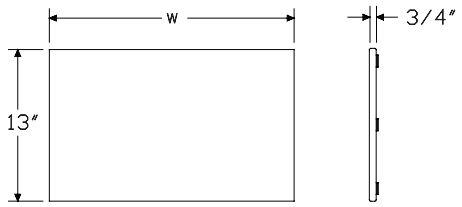

Specification Information

Step 1.

FT491. A

Step 2. Width

36	16 3/4" for 36"-wide cabinet A
42	19 3/4" for 42" -wide cabinet A
48	22 3/4" for 48" -wide cabinet A
60	28 3/4" for 60" -wide cabinet A
72	34 3/4" for 72" -wide cabinet A
84	20" for 84" -wide cabinet A
96	23" for 96" -wide cabinet A

Step 3. Surface Material

T	tackable fabric A
R	tackable fabric, horizontal A

Prices for Steps 1-3.

		T	R
FT491.	**36**	$181	185
	42	$206	212
	48	$230	236
	60	$267	273
	72	$305	314
	84	$206	212
	96	$230	236

Step 4. Surface Finish

See application chart and textiles list for fabric usage and numbers. First 2 digits of number indicate fabric line; remaining digit(s) indicate fabric color.

Price Category 1	+$0
Price Category 2	+$23
Price Category 3	+$40
Price Category 4	+$61
Price Category 5	+$124
Price Category B	+$44
Price Category C	+$61
Price Category D	+$77
Price Category E	+$94
Price Category F	+$120

Markerboard, Storage Cabinet, Frame Top Mounted FT492.

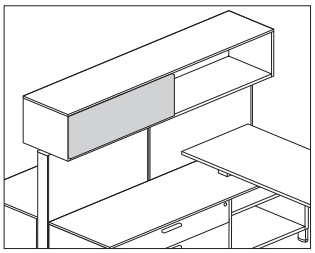

Product Information

Description

This marker board attaches to 1 side of a double-sided frame top mounted storage cabinet to provide a writing surface for dry-erase markers. Attachment hardware included.

Notes

Specify marker board width 1/2 the width of the storage cabinet.

Attaches to back of storage unit (FT415.).

Dimensions

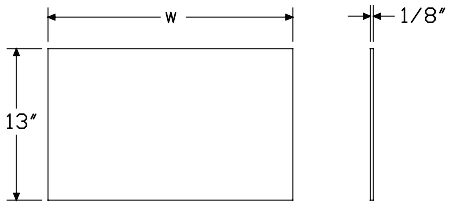

Specification Information

Step 1.

FT492. A

Step 2. Width

36	16 3/4″ for 36″-wide cabinet A
42	19 3/4″ for 42″ -wide cabinet A
48	22 3/4″ for 48″ -wide cabinet A
60	28 3/4″ for 60″ -wide cabinet A
72	34 3/4″ for 72″ -wide cabinet A
84	20″ for 84″ -wide cabinet A
96	23″ for 96″ -wide cabinet A

Prices for Steps 1-2.

FT492.	**36**	$170
	42	$177
	48	$185
	60	$207
	72	$226
	84	$177
	96	$185

Storage Cabinet, Dock Mounted, Sliding Door FD416.

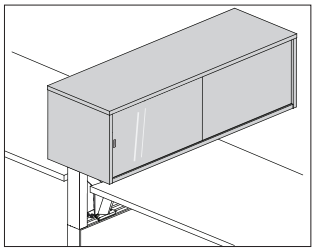

Product Information

Description

This sliding glass door cabinet has a laminate or veneer surface and mounts to the top rail of a Canvas dock to provide storage on 1 or both sides. Back-painted glass doors slide along in inset track. Doors are nonlockable and include a notched pull.

Notes

Door material is always back-painted glass.

Glass doors are back-painted and writable with dry erase marker. Doors are nonmagnetic. Glass doors cannot lock.

Double-sided (D) storage unit provides storage access on both sides of the cabinet, allowing half of the storage to be accessed from each side of the dock.

Single-sided (S) storage unit provides storage access on 1 side of the dock only.

Single-sided (S) units have 2 doors on 1 side of cabinet; double-sided (D) units have 1 door on each side of the cabinet.

Actual height of 11"-high (11) unit is 10½"; actual height of 15"-high (15) unit is 14½".

Order stanchion support for center mount (FD417.) or offset mount (FD419.) separately.

To create a perpendicular application, order perpendicular upper storage stanchion support (FD418.) and storage support leg (FD295.) separately. Storage unit must be specified as center mount (FD416. xxxxC) attachment.

Dimensions

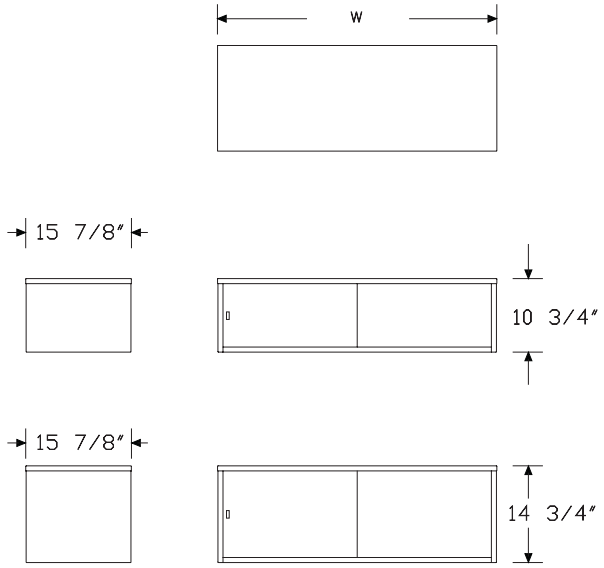

Storage Cabinet, Dock Mounted, Sliding Door *continued*

Specification Information

Step 1.

FD416. A

Step 2. Height

11	11″ high A
15	15″ high A

Step 3. Width

36	36″ wide A
42	42″ wide A
48	48″ wide A
60	60″ wide A
72	72″ wide A

Step 4. Attachment

C	center mount A
F	offset A

Step 5. Storage Type

For center mount (C)

D	double-sided A
S	single-sided A

For offset (F)

S	single-sided A

Step 6. Position

For double-sided (D)

L	opening left A
R	opening right A

For single-sided (S)

S	opening left and right A

Step 7. Surface Material

L	thermally-fused laminate A

Step 8. Door Material

G	glass A

Prices for Steps 1-8.

		CDLLG	CDRLG	CSSLG	FSSLG
FD416. 11	**36**	$3055	3055	3055	3055
	42	$3136	3136	3136	3136
	48	$3237	3237	3237	3237
	60	$3414	3414	3414	3414
	72	$3684	3684	3684	3684
15	**36**	$3086	3086	3086	3086
	42	$3218	3218	3218	3218
	48	$3448	3448	3448	3448
	60	$3768	3768	3768	3768
	72	$4115	4115	4115	4115

Step 9. Top/Edge Finish

LBR	phantom ecru A	+$0
LBS	phantom cocoa A	+$0
LBU	medium matte walnut A	+$0
LBV	warm grey teak A	+$0
76	light brown walnut	+$0
8Q	folkstone grey	+$0
91	white	+$0
98	studio white	+$0
CL	cool grey neutral	+$0
HM	natural maple	+$0
HP	light anigre	+$0
HX	aged cherry	+$0
LBA	clear on ash	+$0
LBB	oak on ash	+$0
LBC	walnut on ash	+$0
LBF	neutral twill	+$0
LBJ	graphite twill	+$0
LBQ	white twill	+$0
LU	soft white	+$0
WL	sandstone	+$0
WN	warm grey neutral	+$0

Step 10. Door Material Finish

8Q	folkstone grey	+$0
91	white	+$0
98	studio white	+$0

Upper Storage Stanchion - Center Mount FD417.

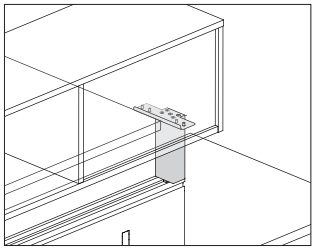

Product Information

Description

This painted metal stanchion attaches 1 end of a dock mounted storage cabinet to the dock top rail in a center mounting position. It can be attached anywhere along the top rail. Package contains 1 stanchion. Attachment hardware included.

Notes

Specify shared stanchion (T) to support 2 adjacent cabinet ends.

Order single-sided or double-sided dock mounted storage cabinet (FD415.) separately.

Dimensions

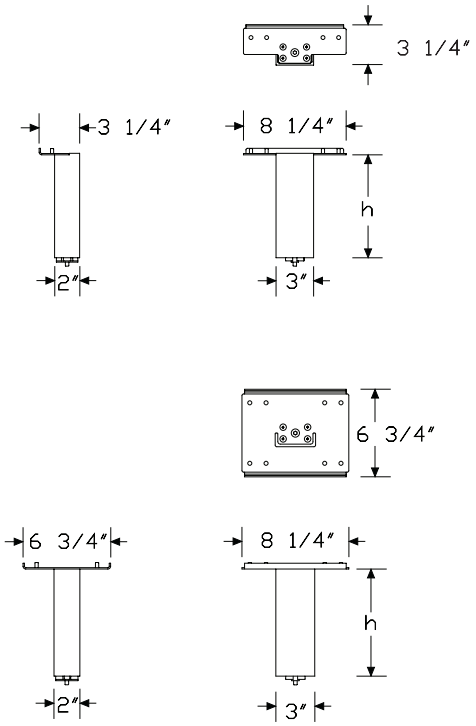

Specification Information

Step 1.

FD417. A

Step 2. Attachment

D	dock

Step 3. Height

09	9″ high
16	16″ high
20	20″ high

Step 4. Grouping/Quantity

S	single
T	shared

Prices for Steps 1-4.

		S	T
FD417. D	**09**	$382	382
	16	$393	393
	20	$407	407

Step 5. Surface Finish

Sand Texture Paint

8Q	folkstone grey	+$0
91	white	+$0
98	studio white	+$0
BK	black	+$0
CL	cool grey neutral	+$0
G1	graphite	+$0
WL	sandstone	+$0
WN	warm grey neutral	+$0

Metallic Paint

CN	metallic champagne	+$0
EH	metallic bronze	+$0
MS	metallic silver	+$0
SNA	satin aluminum	+$10
SNB	satin bronze	+$10
SNC	satin carbon	+$10

Upper Storage Stanchion - Offset Mount FD419.

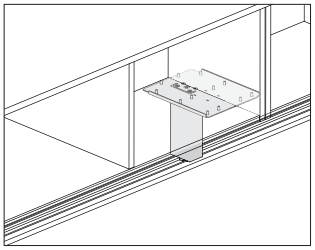

Product Information

Description

This painted metal stanchion attaches 1 end of a dock mounted storage cabinet to the dock top rail in an offset mounting position. It can be attached anywhere along the top rail, and is handed. Package contains 1 stanchion. Attachment hardware included.

Notes

Specify single-shared stanchion (T) to support 2 adjacent cabinet ends.

Order single-sided or double-sided dock mounted storage cabinet (FD415.) separately.

Dimensions

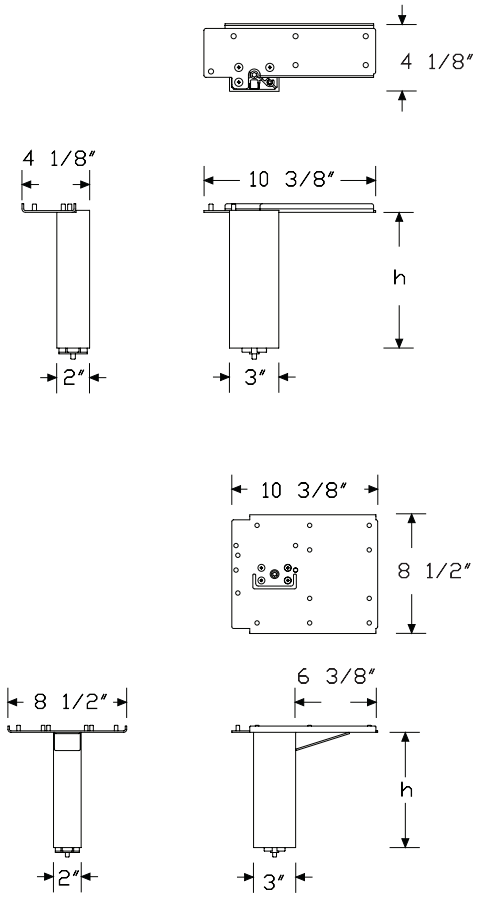

Specification Information

Step 1.

FD419. A

Step 2. Attachment

D	dock

Step 3. Height

09	9″ high
16	16″ high
20	20″ high

Step 4. Grouping/Quantity

L	single left
R	single right
T	single - shared

Prices for Steps 1-4.

		L	R	T
FD419. D	**09**	$378	378	389
	16	$390	390	401
	20	$403	403	414

Step 5. Surface Finish

Sand Texture Paint

8Q	folkstone grey	+$0
91	white	+$0
98	studio white	+$0
BK	black	+$0
CL	cool grey neutral	+$0
G1	graphite	+$0
WL	sandstone	+$0
WN	warm grey neutral	+$0

Metallic Paint

CN	metallic champagne	+$0
EH	metallic bronze	+$0
MS	metallic silver	+$0
SNA	satin aluminum	+$10
SNB	satin bronze	+$10
SNC	satin carbon	+$10

Perpendicular Upper Storage Stanchion Support FD418.

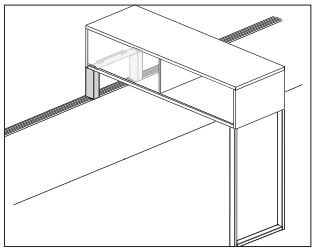

Product Information

Description

This stanchion attaches to the dock to support one end of upper storage mounted perpendicular to the dock. Storage is supported at the other end by a floor stanchion.

Notes

To reach 42″ datum, use 11″-high storage; for 46″ datum, use 15″-high storage. Order storage (FD415., FD416.) separately.

Order floor stanchion (FD295.) separately.

Dimensions

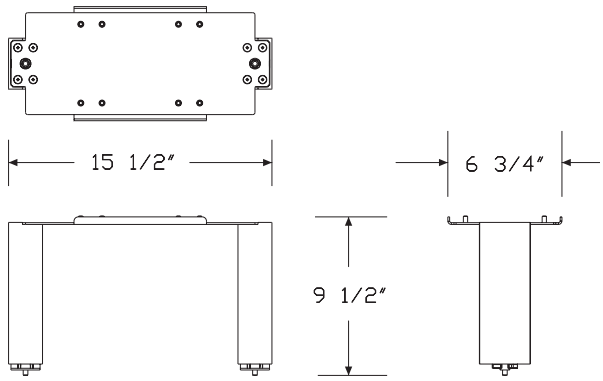

Shared Stanchion Support

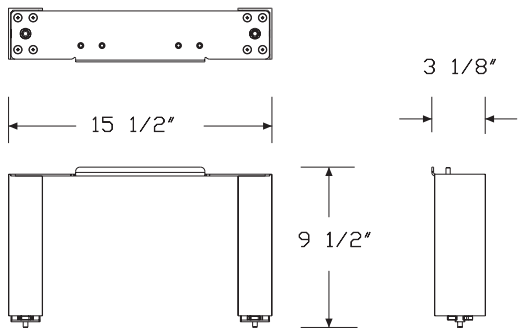

Single sided Stanchion Support

Specification Information

Step 1.

FD418.

Step 2. Attachment

D	dock

Step 3. Height

09	9″ high

Step 4. Grouping/Quantity

S	single
T	shared

Prices for Steps 1-4.

	S	T
FD418. D 09	$755	755

Step 5. Surface Finish

8Q	folkstone grey	+$0
91	white	+$0
98	studio white	+$0
BK	black	+$0
CL	cool grey neutral	+$0
CN	metallic champagne	+$0
EH	metallic bronze	+$0
G1	graphite	+$0
MS	metallic silver	+$0
SNA	satin aluminum	+$10
SNB	satin bronze	+$10
SNC	satin carbon	+$10
WL	sandstone	+$0
WN	warm grey neutral	+$0

Storage Support, Perpendicular to Dock FD295.

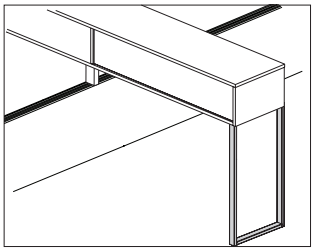

Product Information

Description

This stanchion supports 1 end of upper storage placed perpendicular to the dock. Storage is attached to and supported by the dock at 1 end and by this to-the-floor stanchion at the other end.

Notes

To reach 42″ datum, use 11″-high storage (FD416.); for 46″ datum use 15″-high storage (FD415., FD416.), ordered separately.

Dimensions

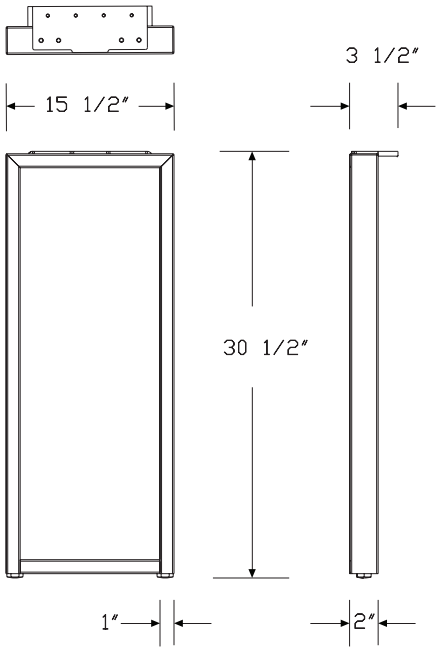

Specification Information

Step 1.

FD295. A

Step 2. Height

31	31″ high stanchion

Step 3. Surface Material

P	painted

Prices for Steps 1-3.

	P
FD295. 31	$836

Step 4. Surface Finish

8Q	folkstone grey	+$0
91	white	+$0
98	studio white	+$0
BK	black	+$0
CL	cool grey neutral	+$0
CN	metallic champagne	+$0
EH	metallic bronze	+$0
G1	graphite	+$0
WL	sandstone	+$0
WN	warm grey neutral	+$0
MS	metallic silver	+$0

Screen FV694.

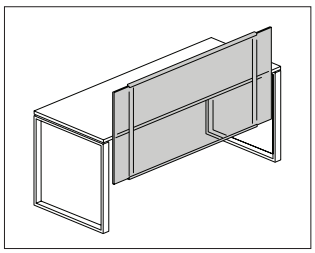

Product Information

Description

This screen attaches to a desk or return. It has a 1"-thick frame with a 1/4"-thick translucent or painted surface. Attachment hardware included.

Notes

When attaching the 12"-high screen to a basic desk or return, specify screen width 6" less than surface width.

When attaching a screen of any height to a single pedestal desk or pedestal return, specify screen width 18" less than surface width. When attaching to a double pedestal desk, specify screen width 30" less than surface width.

When attached to surface, there is a 1 1/2" gap between the back edge and the screen.

For translucent plastic (A) surface material, screen frame finish is metallic silver (MS). For painted (P) surface material, screen frame finish will match bracket finish (Step 6.).

For cable management between screen and back edge of surface, specify cable manager (FV695.) separately.

Dimensions

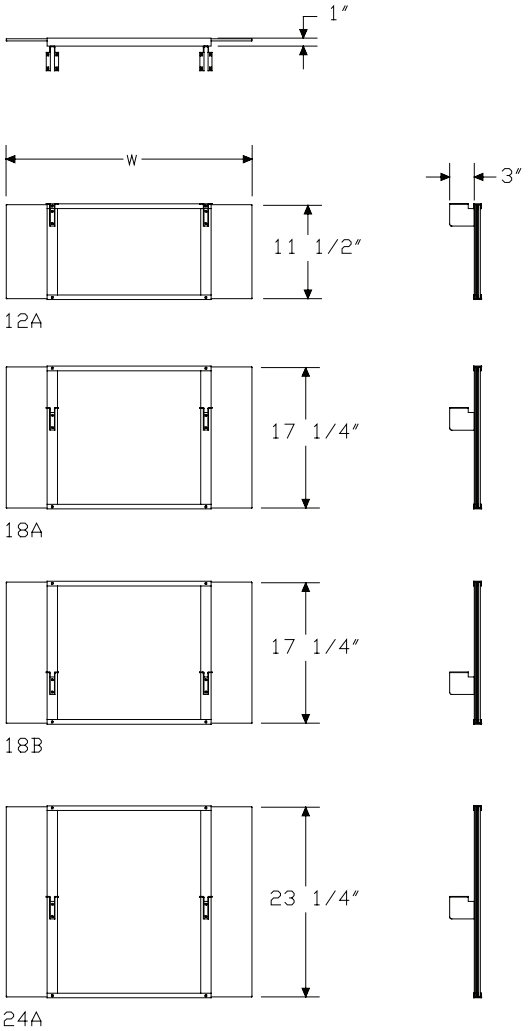

Specification Information

Step 1.

FV694.

Step 2. Surface Material

A	translucent plastic
P	painted

Step 3. Height

For painted (P)

12A	12" below work surface

For translucent plastic (A)

12A	12" below work surface
18A	6" above/12" below work surface
18B	12" above/6" below work surface
24A	12" above/12" below work surface

Step 4. Width

For 12" below work surface (12A)

30	30" wide
36	36" wide
42	42" wide
48	48" wide
54	54" wide
60	60" wide
66	66" wide
72	72" wide

For 6" above/12" below work surface (18A), 12" above/6" below work surface (18B), or 12" above/12" below work surface (24A)

30	30" wide
36	36" wide
42	42" wide
48	48" wide
54	54" wide

Prices for Steps 1-4.

			30	36	42	48	54	60
FV694.	**A**	**12A**	$973	1014	1053	1089	1131	1169
		18A	$1025	1066	1107	1147	1186	—
		18B	$1025	1066	1107	1147	1186	—
		24A	$1169	1218	1261	1310	1355	—
	P	**12A**	$888	921	954	995	1027	1062

			66	72
FV694.	**A**	**12A**	$1208	1245
	P	**12A**	$1097	1132

Step 5. Surface Finish

Sand Texture Paint

For painted (P)

8Q	folkstone grey	+$0
91	white	+$0
98	studio white	+$0
BK	black	+$0
CL	cool grey neutral	+$0
G1	graphite	+$0
WL	sandstone	+$0
WN	warm grey neutral	+$0

Metallic Paint

For painted (P)

CN	metallic champagne	+$0
EH	metallic bronze	+$0
MS	metallic silver	+$0
SNA	satin aluminum	+$10
SNB	satin bronze	+$10
SNC	satin carbon	+$10

Translucent Plastic

For translucent plastic (A)

J9	opal frosted	+$0

Step 6. Bracket Finish

8Q	folkstone grey	+$0
91	white	+$0
98	studio white	+$0
BK	black	+$0
CL	cool grey neutral	+$0
G1	graphite	+$0
WL	sandstone	+$0
WN	warm grey neutral	+$0

Metallic Paint

CN	metallic champagne	+$0
EH	metallic bronze	+$0
MS	metallic silver	+$0
SNA	satin aluminum	+$10
SNB	satin bronze	+$10
SNC	satin carbon	+$10

Modesty Panel FV697.

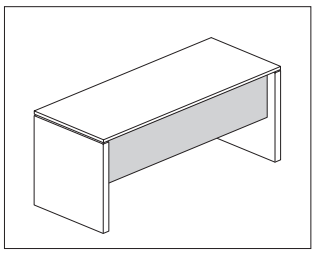

Product Information

Description

This modesty panel attaches to a closed-leg rectangular or concave rectangular desk to provide partial- or full-height enclosure below the surface and increase stability. The panel can be mounted inset from the back edge of the desk, or flush with the back edge for knee clearance. Available in laminate or veneer. Attachment hardware included.

Notes

Modesty panel spans between 2 closed support legs (FV2E2.24, .30, or .36) and attaches to the closed support legs and underside of a surface. It does not work with shared closed support legs.

Grain direction is vertical on veneer and wood-grain laminate panel.

Wood-grain laminate option is only available in 36″ - 60″ widths.

Dimensions

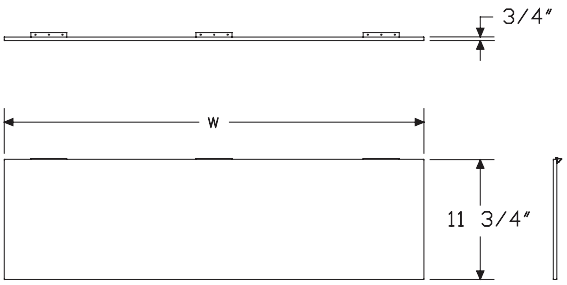

Half Modesty Panel

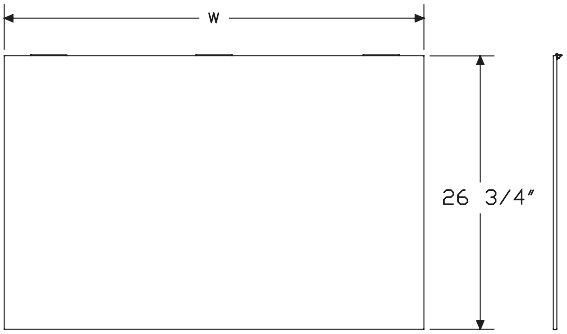

Full Modesty Panel

Specification Information

Step 1.

FV697.

Step 2. Width

60	60″ wide
66	66″ wide
72	72″ wide
84	84″ wide
96	96″ wide

Step 3. Modesty Panel Type

F	full modesty panel
H	half modesty panel

Step 4. Surface Material

H	high-pressure laminate with thermoplastic edge A
L	thermally-fused laminate with thermoplastic edge
W	veneer A

Prices for Steps 1-4.

		H	L	W
FV697. 60	**F**	$902	721	1578
	H	$634	507	886
66	**F**	$990	792	1728
	H	$694	555	982
72	**F**	$1081	865	1892
	H	$754	604	1079
84	**F**	$1256	1005	2204
	H	$778	623	1268
96	**F**	$1441	1153	2526
	H	$847	641	1467

Step 5. Surface Finish

Solid-Color Laminate

For 60" wide (60) with thermally-fused laminate with thermoplastic edge (L)

8Q	folkstone grey	+$0
91	white	+$0
98	studio white	+$0
CL	cool grey neutral	+$0
LU	soft white	+$0
WL	sandstone	+$0
WN	warm grey neutral	+$0

Twill Laminate

For 60" wide (60) with thermally-fused laminate with thermoplastic edge (L)

LBF	neutral twill	+$0
LBJ	graphite twill	+$0
LBQ	white twill	+$0

Wood-Grain Laminate

For 60" wide (60) with thermally-fused laminate with thermoplastic edge (L)

76	light brown walnut	+$0
HM	natural maple	+$0
HP	light anigre	+$0
HX	aged cherry	+$0
LBA	clear on ash	+$0
LBR	phantom ecru	+$0
LBS	phantom cocoa	+$0
LBU	medium matte walnut	+$0
LBV	warm grey teak	+$0
LBB	oak on ash	+$0
LBC	walnut on ash	+$0

Solid-Color Laminate

For 66" wide (66), 72" wide (72), 84" wide (84), or 96" wide (96) with thermally-fused laminate with thermoplastic edge (L)

8Q	folkstone grey	+$0
91	white	+$0
98	studio white	+$0
CL	cool grey neutral	+$0
LU	soft white	+$0
WL	sandstone	+$0
WN	warm grey neutral	+$0

Wood Veneer

For veneer (W)

2U	light brown walnut A	+$50
40	dark brown walnut	+$50
CHD	noble cherry	+$50
ET	clear on ash A	+$50
EU	oak on ash A	+$50
EV	walnut on ash A	+$50
EW	medium matte walnut	+$50
UL	natural maple A	+$50
WHN	natural white oak	+$50

For 60" wide (60) with high-pressure laminate with thermoplastic edge (H)

76	light brown walnut	+$0
8Q	folkstone grey	+$0
91	white	+$0
98	studio white	+$0
CL	cool grey neutral	+$0
HF	inner tone light	+$0
HM	natural maple	+$0
HP	light anigre	+$0
HX	aged cherry	+$0
LBA	clear on ash	+$0
LBB	oak on ash	+$0
LBC	walnut on ash	+$0
LBF	neutral twill	+$0
LBJ	graphite twill	+$0
LBQ	white twill	+$0
LBR	phantom ecru A	+$0
LBS	phantom cocoa A	+$0
LBU	medium matte walnut A	+$0
LBV	warm grey teak A	+$0
LT	light tone	+$0
LU	soft white	+$0
OG	honey maple A	+$0
WL	sandstone	+$0
WN	warm grey neutral	+$0

For 66" wide (66), 72" wide (72), 84" wide (84), or 96" wide (96) with high-pressure laminate with thermoplastic edge (H)

8Q	folkstone grey	+$0
91	white	+$0
98	studio white	+$0
CL	cool grey neutral	+$0
HF	inner tone light	+$0
LT	light tone	+$0
LU	soft white	+$0
WL	sandstone	+$0
WN	warm grey neutral	+$0

Privacy Panel FV693.

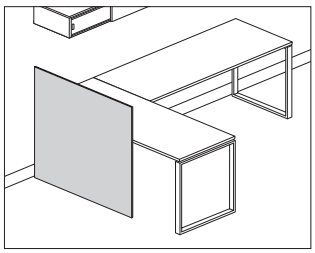

Product Information

Description

This panel stands on the floor and attaches to a desk or return to provide partial- or full-width privacy. It is 3/4″ thick, has a laminate or veneer surface, and includes leveling glides. Attachment hardware included.

Notes

For additional product options, see Vary Easy Program in Appendices.

Grain direction is vertical on veneer and wood-grain laminate panel.

29″-high panel provides modesty from the floor to the surface. 42″- and 46″-high panels rise above the surface for visual privacy.

When attached to surface, there is a 1 1/2″ gap between the back edge and the panel.

Wood-grain laminate option is only available in 33″ - 60″ widths. Specify 2 panels to match the width of surfaces wider than 60″.

For cable management between privacy panel and back edge of surface, specify cable manager (FV695.) separately.

Dimensions

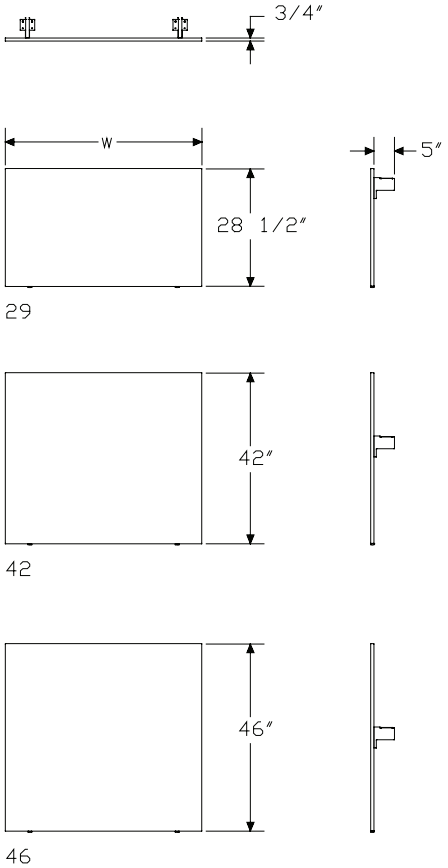

Specification Information

Step 1.

FV693.

Step 2. Height

29	29" high
42	42" high
46	46" high

Step 3. Width

For 29" high (29)

33	33" wide
36	36" wide
48	48" wide
54	54" wide
60	60" wide
66	66" wide
72	72" wide
84	84" wide

For 42" high (42) or 46" high (46)

48	48" wide
54	54" wide
60	60" wide
72	72" wide

Step 4. Surface Material

L	high-pressure laminate
W	veneer A

Prices for Steps 1-4.

			L	W
FV693.	**29**	**33**	$402	870
		36	$436	948
		48	$577	1263
		54	$648	1416
		60	$721	1578
		66	$792	1728
		72	$865	1892
		84	$1005	2204
	42	**48**	$699	1666
		54	$784	1873
		60	$870	2085
		72	$1095	2501
	46	**48**	$732	1742
		54	$826	1968
		60	$916	2184
		72	$1095	2615

Step 5. Surface Finish

Solid-Color Laminate

For 33" wide (33), 36" wide (36), 48" wide (48), 54" wide (54), or 60" wide (60) with high-pressure laminate (L)

8Q	folkstone grey	+$0
91	white	+$0
98	studio white	+$0
CL	cool grey neutral	+$0
LU	soft white	+$0
WL	sandstone	+$0
WN	warm grey neutral	+$0

Twill Laminate

For 33" wide (33), 36" wide (36), 48" wide (48), 54" wide (54), or 60" wide (60) with high-pressure laminate (L)

LBF	neutral twill	+$0
LBJ	graphite twill	+$0
LBQ	white twill	+$0

Wood-Grain Laminate

For 33" wide (33), 36" wide (36), 48" wide (48), 54" wide (54), or 60" wide (60) with high-pressure laminate (L)

76	light brown walnut	+$0
HM	natural maple	+$0
HP	light anigre	+$0
HX	aged cherry	+$0
LBA	clear on ash	+$0
LBR	phantom ecru	+$0
LBS	phantom cocoa	+$0
LBU	medium matte walnut	+$0
LBV	warm grey teak	+$0
LBB	oak on ash	+$0
LBC	walnut on ash	+$0

Solid-Color Laminate		
For 66" wide (66), 72" wide (72), or 84" wide (84) with high-pressure laminate (L)		
8Q	folkstone grey	+$0
91	white	+$0
98	studio white	+$0
CL	cool grey neutral	+$0
LU	soft white	+$0
WL	sandstone	+$0
WN	warm grey neutral	+$0

Wood Veneer		
For veneer (W)		
2U	light brown walnut A	+$85
40	dark brown walnut	+$85
CHD	noble cherry	+$85
ET	clear on ash A	+$85
EU	oak on ash A	+$85
EV	walnut on ash A	+$85
EW	medium matte walnut	+$85
UL	natural maple A	+$85
WHN	natural white oak	+$85

Step 6. Support Finish

Metallic Paint		
CN	metallic champagne	+$0
EH	metallic bronze	+$0
MS	metallic silver	+$0
SNA	satin aluminum	+$10
SNB	satin bronze	+$10
SNC	satin carbon	+$10

Sand Texture Paint		
8Q	folkstone grey	+$0
91	white	+$0
98	studio white	+$0
BK	black	+$0
CL	cool grey neutral	+$0
G1	graphite	+$0
WL	sandstone	+$0
WN	warm grey neutral	+$0

Stanchion Infill, Acrylic FD430.

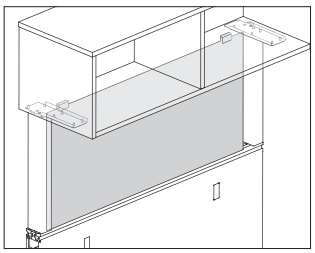

Product Information

Description

This acrylic infill fits between 2 stanchions below a dock mounted storage cabinet.

Notes

Infill is used between single or shared stanchions.

Specify infill width to match the width of storage cabinet (FD415.).

An opening is created between infill and stanchion at each end of infill.

- Single stanchion at each end, openings are 3/4″
- Single stanchion at 1 end and shared stanchion at 1 end, openings are 1 1/4″
- Shared stanchion at each end, openings are 1 3/4″

Dimensions

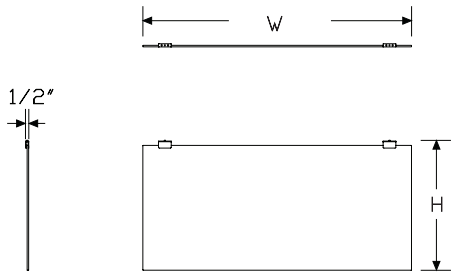

Specification Information

Step 1.

FD430. A

Step 2. Type

A	acrylic

Step 3. Height

16	16″ high for overhead storage at 53″ high
20	20″ high for overhead storage at 57″ high

Step 4. Width

36	36″ wide
42	42″ wide
48	48″ wide
60	60″ wide
72	72″ wide

Prices for Steps 1-4.

		36	42	48	60	72
FD430. A	**16**	$609	638	660	698	763
	20	$621	647	672	711	774

Step 5. Infill Finish

TR	clear	+$0
J9	opal frosted	+$50

Step 6. Attachment Bracket Finish

MS	metallic silver	+$0
SNA	satin aluminum	+$10
SNB	satin bronze	+$10
SNC	satin carbon	+$10

Glass Screen, Dock Mounted FD114.

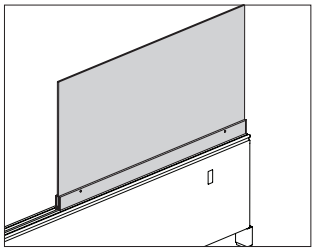

Product Information

Description

This glass screen attaches anywhere along the top rail of the 22" high Canvas dock to extend the overall height and to provide boundary. Attachment hardware included.

Dimensions

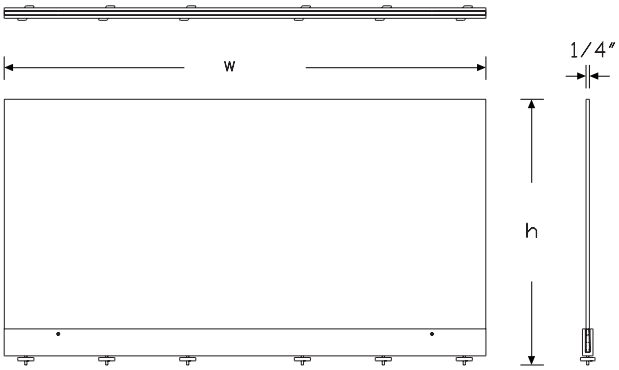

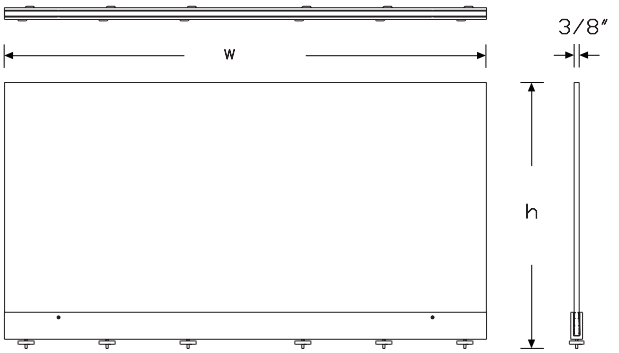

Specification Information

Step 1.

FD114.

Step 2. Type

G	glass

Step 3. Height

20	20" high
24	24" high
31	31" high
35	35" high

Step 4. Width

24	24" wide
36	36" wide
42	42" wide
48	48" wide
60	60" wide
72	72" wide

Step 5. Surface Finish

TR	clear glass - 1/4" thick
5A	opal etched - 1/4" thick
C3	clear glass - 3/8" thick
G3	opal glass - 3/8" thick
NN	no glass- for customer's own glass 1/4"
N3	no glass- for customer's own glass 3/8"

Prices for Steps 1-5.

		24TR	245A	24C3	24G3	24NN	24N3
FD114. G	**20**	$701	779	909	1294	291	291
	24	$826	917	1050	1455	291	291
	31	$968	1073	1334	1584	291	291
	35	$1071	1187	1491	1755	291	291

		36TR	365A	36C3	36G3	36NN	36N3
FD114. G	**20**	$935	1039	1294	1439	347	347
	24	$1103	1226	1502	1668	347	347
	31	$1334	1483	1850	2056	347	347
	35	$1375	1526	2070	2302	347	347

		42TR	425A	42C3	42G3	42NN	42N3
FD114. G	**20**	$1071	1187	1485	1648	377	377
	24	$1232	1367	1696	1885	377	377
	31	$1526	1691	2058	2288	377	377
	35	$1528	1697	2288	2537	377	377

Glass Screen, Dock Mounted

continued

		48TR	485A	48C3	48G3	48NN	48N3
FD114. G	**20**	$1201	1332	1643	1826	405	405
	24	$1375	1526	1911	2120	405	405
	31	$1539	1712	2317	2574	405	405
	35	$1736	1927	2575	2860	405	405

		60TR	605A	60C3	60G3	60NN	60N3
FD114. G	**20**	$1430	1591	1928	2142	433	433
	24	$1497	1663	2202	2444	433	433
	31	$1878	2086	2794	3104	433	433
	35	$2019	2243	3054	3391	433	433

		72TR	725A	72C3	72G3	72NN	72N3
FD114. G	**20**	$1497	1663	2239	2488	449	449
	24	$1771	1963	2640	2934	449	449
	31	$2142	2380	3234	3592	449	449
	35	$2350	2612	3589	2552	449	449

Step 6. Finish		
AN	anodized	+$0

Glass Screen, Stanchion Infill FD436.

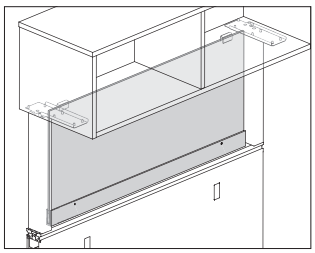

Product Information

Description

This glass screen fits between 2 stanchions below a dock mounted storage cabinet. Attachment hardware included.

Notes

Glass infill is used between single or shared stanchions.

Glass infill can be installed and removed with storage cabinet (FD415.) installed.

Specify glass infill width to match the width of storage cabinet (FD415.).

An opening is created between infill and stanchion at each end of infill.

- Single stanchion at each end, openings are 3/4″
- Single stanchion at 1 end and shared stanchion at 1 end, openings are 1 1/4″
- Shared stanchion at each end, openings are 1 3/4″

Dimensions

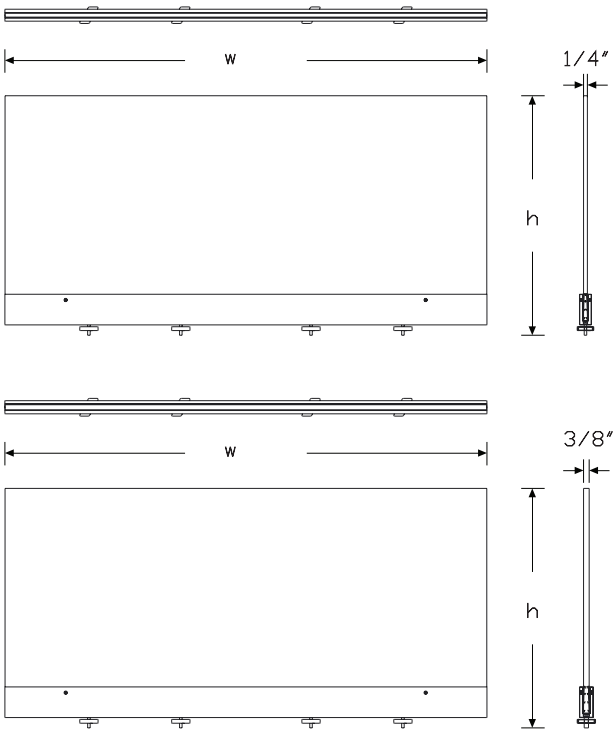

Specification Information

Step 1.

FD436. A

Step 2. Type

G glass

Step 3. Height

16 16″ high for overhead storage at 53″ high
20 20″ high for overhead storage at 57″ high

Step 4. Width

36 36″ wide
42 42″ wide
48 48″ wide
60 60″ wide
72 72″ wide

Step 5. Surface Finish

TR clear glass - 1/4″ thick
5A opal etched - 1/4″ thick
C3 clear glass - 3/8″ thick
G3 opal glass - 3/8″ thick
NN no glass- for customer's own glass 1/4″
N3 no glass- for customer's own glass 3/8″

Prices for Steps 1-5.

		36TR	365A	36C3	36G3	36NN	36N3
FD436. G	**16**	$823	914	1045	1163	314	314
	20	$935	1038	1294	1440	348	348

		42TR	425A	42C3	42G3	42NN	42N3
FD436. G	**16**	$873	969	1210	1347	340	340
	20	$1067	1188	1484	1648	377	377

		48TR	485A	48C3	48G3	48NN	48N3
FD436. G	**16**	$998	1105	1383	1535	366	366
	20	$1194	1328	1643	1823	406	406

		60TR	605A	60C3	60G3	60NN	60N3
FD436. G	**16**	$1194	1328	1643	1823	391	391
	20	$1430	1589	1929	2141	435	435

		72TR	725A	72C3	72G3	72NN	72N3
FD436. G	**16**	$1402	1561	1942	2156	419	419
	20	$1684	1869	2350	2611	464	464

Glass Screen, Stanchion Infill

continued

Step 6. Finish		
AN	anodized	+$0

Pari Screen, Dock Mounted FD115.

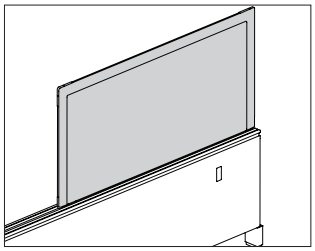

Product Information

Description

This tackable fabric screen attaches anywhere along the top rail of the 22″ high Canvas dock to extend the overall height and to provide boundary with a tackable surface. Attachment hardware included.

Notes

Screen accepts Customer's Own Material (COM). Yardage is estimated for nondirectional 54″-wide fabrics.
For vertical fabric direction (T):
Height—Yardage
20—1.58
24—1.84
31—2.27
35—2.53
For horizontal fabric direction (R), for 20″ high and 24″ high:
Width—Yardage
24—0.95
36—1.32
42—1.51
48—1.71
60—2.07
72—2.46
For horizontal fabric direction (R), for 31″ high and 35″ high:
Width—Yardage
24—1.90
36—2.66
42—3.02
48—3.41
60—4.17
72—4.92
For information on multiple quantities or directional fabrics, contact COM Department. See Order Information in Appendices.

Dimensions

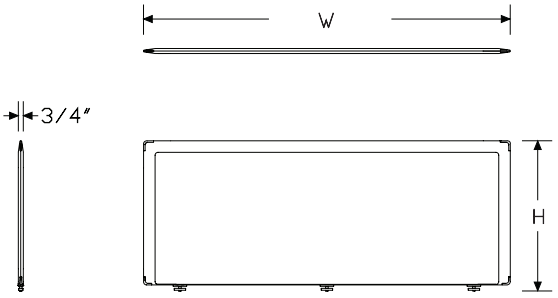

Pari Screen, Dock Mounted

continued

Specification Information

Step 1.

FD115. A

Step 2. Type

F	fabric

Step 3. Height

20	20" high (to reach datum of 42"H)
24	24" high (to reach datum of 46"H)
31	31" high (to reach datum of 53"H)
35	35" high (to reach datum of 57"H)

Step 4. Width

24	24" wide
36	36" wide
42	42" wide
48	48" wide
60	60" wide
72	72" wide

Step 5. Surface Material

For 24" wide (24), 36" wide (36), 42" wide (42), or 48" wide (48)

T	tackable fabric
R	tackable fabric, horizontal

For 60" wide (60) or 72" wide (72)

R	tackable fabric, horizontal

Prices for Steps 1-5.

		24T	24R	36T	36R	42T	42R
FD115. F	**20**	$915	915	1035	1035	1157	1157
	24	$976	976	1097	1097	1218	1218
	31	$1218	1218	1339	1339	1461	1461
	35	$1339	1339	1461	1461	1583	1583

		48T	48R	60R	72R
FD115. F	**20**	$1280	1280	1461	1583
	24	$1339	1339	1522	1642
	31	$1583	1583	1764	1886
	35	$1702	1702	1886	2007

Step 6. Fabric

For 20" high (to reach datum of 42"H) (20) with 24" wide (24)

Price Category B	+$72
Price Category 1	+$0
Price Category 2	+$16
Price Category 3	+$37
Price Category 4	+$64
Price Category 5	+$0
Price Category C	+$98
Price Category E	+$149

For 20" high (to reach datum of 42"H) (20) with 36" wide (36)

Price Category B	+$100
Price Category 1	+$0
Price Category 2	+$22
Price Category 3	+$52
Price Category 4	+$89
Price Category 5	+$0
Price Category C	+$136
Price Category E	+$206

For 20" high (to reach datum of 42"H) (20) with 42" wide (42)

Price Category B	+$114
Price Category 1	+$0
Price Category 2	+$24
Price Category 3	+$59
Price Category 4	+$102
Price Category 5	+$0
Price Category C	+$155
Price Category E	+$236

For 20" high (to reach datum of 42"H) (20) with 48" wide (48)

Price Category B	+$128
Price Category 1	+$0
Price Category 2	+$28
Price Category 3	+$66
Price Category 4	+$115
Price Category 5	+$0
Price Category C	+$175
Price Category E	+$268

Pari Screen, Dock Mounted

continued

For 20" high (to reach datum of 42"H) (20) with 60" wide (60)	
Price Category B	+$156
Price Category 1	+$0
Price Category 2	+$34
Price Category 3	+$80
Price Category 4	+$140
Price Category 5	+$0
Price Category C	+$212
Price Category E	+$323

For 20" high (to reach datum of 42"H) (20) with 72" wide (72)	
Price Category B	+$185
Price Category 1	+$0
Price Category 2	+$40
Price Category 3	+$96
Price Category 4	+$166
Price Category 5	+$0
Price Category C	+$252
Price Category E	+$384

For 24" high (to reach datum of 46"H) (24) with 24" wide (24)	
Price Category B	+$72
Price Category 1	+$0
Price Category 2	+$16
Price Category 3	+$37
Price Category 4	+$64
Price Category 5	+$0
Price Category C	+$98
Price Category E	+$149

For 24" high (to reach datum of 46"H) (24) with 36" wide (36)	
Price Category B	+$100
Price Category 1	+$0
Price Category 2	+$22
Price Category 3	+$52
Price Category 4	+$89
Price Category 5	+$0
Price Category C	+$136
Price Category E	+$206

For 24" high (to reach datum of 46"H) (24) with 42" wide (42)	
Price Category B	+$114
Price Category 1	+$0
Price Category 2	+$24
Price Category 3	+$59
Price Category 4	+$102
Price Category 5	+$0
Price Category C	+$155
Price Category E	+$236

For 24" high (to reach datum of 46"H) (24) with 48" wide (48)	
Price Category B	+$128
Price Category 1	+$0
Price Category 2	+$28
Price Category 3	+$66
Price Category 4	+$115
Price Category 5	+$0
Price Category C	+$175
Price Category E	+$268

For 24" high (to reach datum of 46"H) (24) with 60" wide (60)	
Price Category B	+$156
Price Category 1	+$0
Price Category 2	+$34
Price Category 3	+$80
Price Category 4	+$140
Price Category 5	+$0
Price Category C	+$212
Price Category E	+$323

For 24" high (to reach datum of 46"H) (24) with 72" wide (72)	
Price Category B	+$185
Price Category 1	+$0
Price Category 2	+$40
Price Category 3	+$96
Price Category 4	+$166
Price Category 5	+$0
Price Category C	+$252
Price Category E	+$384

Pari Screen, Dock Mounted

continued

For 31" high (to reach datum of 53"H) (31) with 24" wide (24)	
Price Category B	+$143
Price Category 1	+$0
Price Category 2	+$31
Price Category 3	+$73
Price Category 4	+$128
Price Category 5	+$0
Price Category C	+$194
Price Category E	+$296

For 31" high (to reach datum of 53"H) (31) with 36" wide (36)	
Price Category B	+$200
Price Category 1	+$0
Price Category 2	+$43
Price Category 3	+$103
Price Category 4	+$180
Price Category 5	+$0
Price Category C	+$272
Price Category E	+$415

For 31" high (to reach datum of 53"H) (31) with 42" wide (42)	
Price Category B	+$227
Price Category 1	+$0
Price Category 2	+$49
Price Category 3	+$118
Price Category 4	+$204
Price Category 5	+$0
Price Category C	+$310
Price Category E	+$472

For 31" high (to reach datum of 53"H) (31) with 48" wide (48)	
Price Category B	+$257
Price Category 1	+$0
Price Category 2	+$55
Price Category 3	+$132
Price Category 4	+$230
Price Category 5	+$0
Price Category C	+$349
Price Category E	+$533

For 31" high (to reach datum of 53"H) (31) with 60" wide (60)	
Price Category B	+$313
Price Category 1	+$0
Price Category 2	+$68
Price Category 3	+$162
Price Category 4	+$282
Price Category 5	+$0
Price Category C	+$427
Price Category E	+$652

For 31" high (to reach datum of 53"H) (31) with 72" wide (72)	
Price Category B	+$370
Price Category 1	+$0
Price Category 2	+$80
Price Category 3	+$191
Price Category 4	+$332
Price Category 5	+$0
Price Category C	+$504
Price Category E	+$768

For 35" high (to reach datum of 57"H) (35) with 24" wide (24)	
Price Category B	+$143
Price Category 1	+$0
Price Category 2	+$31
Price Category 3	+$73
Price Category 4	+$128
Price Category 5	+$0
Price Category C	+$194
Price Category E	+$296

For 35" high (to reach datum of 57"H) (35) with 36" wide (36)	
Price Category B	+$200
Price Category 1	+$0
Price Category 2	+$43
Price Category 3	+$103
Price Category 4	+$180
Price Category 5	+$0
Price Category C	+$272
Price Category E	+$415

Pari Screen, Dock Mounted

continued

For 35" high (to reach datum of 57"H) (35) with 42" wide (42)	
Price Category B	+$227
Price Category 1	+$0
Price Category 2	+$49
Price Category 3	+$118
Price Category 4	+$204
Price Category 5	+$0
Price Category C	+$310
Price Category E	+$472

For 35" high (to reach datum of 57"H) (35) with 48" wide (48)	
Price Category B	+$257
Price Category 1	+$0
Price Category 2	+$55
Price Category 3	+$132
Price Category 4	+$230
Price Category 5	+$0
Price Category C	+$349
Price Category E	+$533

For 35" high (to reach datum of 57"H) (35) with 60" wide (60)	
Price Category B	+$313
Price Category 1	+$0
Price Category 2	+$68
Price Category 3	+$162
Price Category 4	+$282
Price Category 5	+$0
Price Category C	+$427
Price Category E	+$652

For 35" high (to reach datum of 57"H) (35) with 72" wide (72)	
Price Category B	+$370
Price Category 1	+$0
Price Category 2	+$80
Price Category 3	+$191
Price Category 4	+$332
Price Category 5	+$0
Price Category C	+$504
Price Category E	+$768

Pari Screen, Stanchion Infill Fabric FD435.

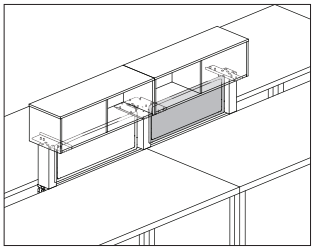

Product Information

Description

This tackable fabric screen fits between 2 stanchions below a dock mounted storage cabinet. Attachment hardware included.

Notes

Fabric infill is used between single or shared stanchions.

Fabric infill can be installed and removed with storage cabinet (FD415.) installed.

Specify fabric infill width to match the width of storage cabinet (FD415.).

An opening is created between infill and stanchion at each end of infill.

- Single stanchion at each end, openings are 3/4"
- Single stanchion at 1 end and shared stanchion at 1 end, openings are 1 1/4"
- Shared stanchion at each end, openings are 1 3/4"

Screen accepts Customer's Own Material (COM). Yardage is estimated for nondirectional 54"-wide fabrics.

For vertical fabric direction (T):

Height—Yardage

16—1.30

20—1.53

For horizontal fabric direction (R):

Width—Yardage

36—1.17

42—1.36

48—1.53

60—1.92

72—2.29

For information on multiple quantities or directional fabrics, contact COM Department. See Order Information in Appendices.

Dimensions

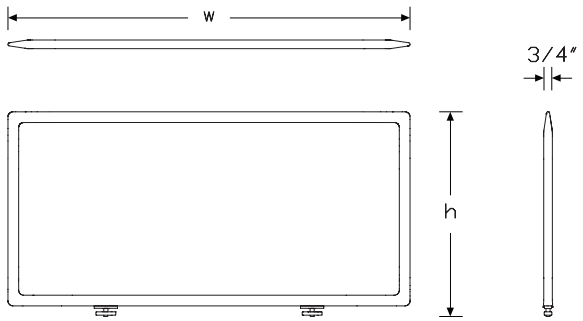

Specification Information

Step 1.

FD435. A

Step 2. Height

16	16" high for overhead storage at 53" high
20	20" high for overhead storage at 57" high

Step 3. Width

36	36" wide
42	42" wide
48	48" wide
60	60" wide
72	72" wide

Step 4. Surface Material

For 36" wide (36), 42" wide (42), or 48" wide (48)

R	tackable fabric, horizontal
T	tackable fabric

For 60" wide (60) or 72" wide (72)

R	tackable fabric, horizontal

Prices for Steps 1-4.

			R	T
FD435.	**16**	**36**	$1080	1080
		42	$1215	1215
		48	$1348	1348
		60	$1417	—
		72	$1482	—
	20	**36**	$1145	1145
		42	$1281	1281
		48	$1417	1417
		60	$1615	—
		72	$1685	—

Pari Screen, Stanchion Infill
Fabric *continued*

Step 5. Fabric	
For 36" wide (36), 42" wide (42), or 48" wide (48)	
Price Category B	+$113
Price Category 1	+$0
Price Category 2	+$22
Price Category 3	+$50
Price Category 4	+$88
Price Category 5	+$0
Price Category C	+$127
Price Category E	+$234
For 60" wide (60) or 72" wide (72)	
Price Category B	+$149
Price Category 1	+$0
Price Category 2	+$37
Price Category 3	+$88
Price Category 4	+$152
Price Category 5	+$0
Price Category C	+$223
Price Category E	+$234

Pari Screen, Surface Attached FT351.

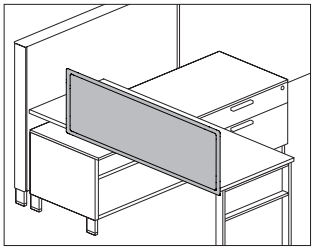

Product Information

Description

This tackable fabric screen attaches to a Canvas work surface to provide boundary with a tackable surface. Attachment hardware included.

Notes

Screen widths are actual dimensions, and extend to the end of Canvas work surfaces.

Screen extends 4″ below surface to hide attachment hardware.

Screen can be flush with back edge of surface, or provide a 1″ gap.

Screens 48″ wide and wider include an additional 1″-wide center mounting bracket.

Screen accepts Customer's Own Material (COM). Yardage is estimated for nondirectional 54″-wide fabrics.

For vertical fabric direction (T):

Height—Yardage

42—1.49

46—1.73

53—2.18

For horizontal fabric direction (R):

Width—Yardage

40—1.34

42—1.51

46—1.62

48—1.71

52—1.81

54—1.90

60—2.07

66—2.27

72—2.46

For information on multiple quantities or directional fabrics, contact COM Department. See Order Information in Appendices.

Dimensions

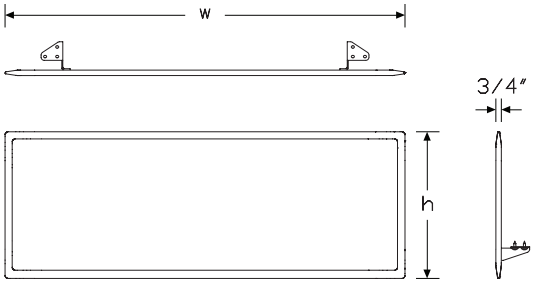

Pari Screen, Surface Attached

continued

Specification Information

Step 1.

FT351. A

Step 2. Attachment

C	Canvas surface attached A

Step 3. Height

42	42" high A
46	46" high A
53	53" high A

Step 4. Width

40	39½" wide A
42	42" wide A
46	45½" wide A
48	48" wide A
52	51½" wide A
54	54" wide A
60	60" wide A
66	66" wide A
72	72" wide A

Step 5. Surface Material

For 39½" wide (40), 42" wide (42), 45½" wide (46), or 48" wide (48)

R	tackable fabric, horizontal A
T	tackable fabric A

For 51½" wide (52)

R	tackable fabric, horizontal A

For 54" wide (54), 60" wide (60), 66" wide (66), or 72" wide (72)

R	tackable fabric, horizontal A

Prices for Steps 1-5.

		40R	40T	42R	42T	46R	46T
FT351. C	**42**	$955	955	989	989	1001	1001
	46	$1033	1033	1071	1071	1123	1123
	53	$1249	1249	1349	1349	1406	1406

		48R	48T	52R	54R	60R	66R
FT351. C	**42**	$1019	1019	1102	1129	1205	1292
	46	$1181	1181	1261	1292	1386	1461
	53	$1422	1422	1485	1503	1530	1573

		72R
FT351. C	**42**	$1361
	46	$1517
	53	$1602

Step 6. Bracket Finish

G2	graphite satin A	+$0

Step 7. Fabric

For 39½" wide (40), 42" wide (42), 45½" wide (46), or 48" wide (48)

Price Category B	+$136
Price Category 1	+$0
Price Category 2	+$28
Price Category 3	+$65
Price Category 4	+$113
Price Category 5	+$0
Price Category C	+$167
Price Category E	+$281

For 51½" wide (52), 54" wide (54), or 60" wide (60)

Price Category B	+$160
Price Category 1	+$0
Price Category 2	+$32
Price Category 3	+$78
Price Category 4	+$136
Price Category 5	+$0
Price Category C	+$234
Price Category E	+$281

For 66" wide (66) or 72" wide (72)

Price Category B	+$190
Price Category 1	+$0
Price Category 2	+$40
Price Category 3	+$94
Price Category 4	+$162
Price Category 5	+$0
Price Category C	+$234
Price Category E	+$281

Pari Screen, Surface Attached with Modesty FT353.

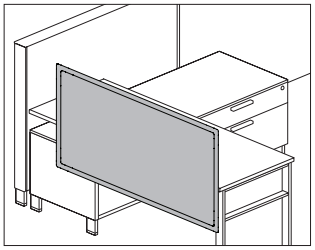

Product Information

Description

This tackable fabric screen attaches to a Canvas work surface to provide boundary and modesty with a tackable surface. An optional cable management trough is available. Trough finish is graphite. Attachment hardware included.

Notes

Screen widths are actual dimensions, and extend to the end of Canvas work surfaces.

Screen extends 10″ below surface for modesty.

Screen can be flush with back edge of surface, or provide a 1″ gap.

Screens 48″ wide and wider include an additional 1″-wide center mounting bracket.

Screen accepts Customer's Own Material (COM). Yardage is estimated for nondirectional 54″-wide fabrics.

For vertical fabric direction (T):

Height—Yardage

42—1.90

46—2.14

53—2.59

For horizontal fabric direction (R):

Width—Yardage

40—2.87

42—3.02

46—3.22

48—3.41

52—3.63

54—3.78

60—4.17

66—4.54

72—4.92

For information on multiple quantities or directional fabrics, contact COM Department. See Order Information in Appendices.

Dimensions

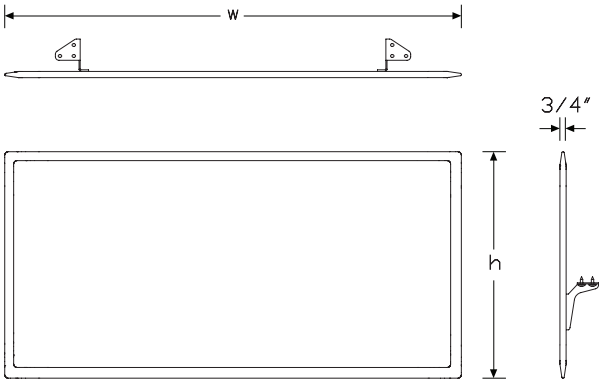

Pari Screen, Surface Attached with Modesty *continued*

Specification Information

Step 1.

FT353. A

Step 2. Attachment

C	Canvas surface attached A

Step 3. Height

A42	42" high/10" below surface A
A46	46" high/10" below surface A
A53	53" high/10" below surface A

Step 4. Width

40	39½" wide A
42	42" wide A
46	45½" wide A
48	48" wide A
52	51½" wide A
54	54" wide A
60	60" wide A
66	66" wide A
72	72" wide A

Step 5. Surface Material

For 39½" wide (40), 42" wide (42), 45½" wide (46), or 48" wide (48)

R	tackable fabric, horizontal A
T	tackable fabric A

For 51½" wide (52)

R	tackable fabric, horizontal A

For 54" wide (54), 60" wide (60), 66" wide (66), or 72" wide (72)

R	tackable fabric, horizontal A

Prices for Steps 1-5.

		40R	40T	42R	42T	46R	46T
FT353. C	**A42**	$1088	1088	1123	1123	1237	1237
	A46	$1249	1249	1319	1319	1373	1373
	A53	$1436	1436	1461	1461	1555	1555

		48R	48T	52R	54R	60R	66R
FT353. C	**A42**	$1249	1249	1375	1406	1436	1548
	A46	$1417	1417	1471	1485	1573	1653
	A53	$1573	1573	1608	1629	1684	1828

		72R
FT353. C	**A42**	$1591
	A46	$1692
	A53	$1861

Step 6. Cable Trough

NC	no cable way A	+$0
CW	cable way A	+$25

Step 7. Cable Trough Finish

G2	graphite satin A	+$0

Step 8. Bracket Finish

G2	graphite satin A	+$0

Step 9. Fabric

For 39½" wide (40), 42" wide (42), 45½" wide (46), or 48" wide (48)

Price Category B	+$244
Price Category 1	+$0
Price Category 2	+$43
Price Category 3	+$103
Price Category 4	+$180
Price Category 5	+$0
Price Category C	+$336
Price Category E	+$509

For 51½" wide (52), 54" wide (54), or 60" wide (60)

Price Category B	+$322
Price Category 1	+$0
Price Category 2	+$62
Price Category 3	+$148
Price Category 4	+$257
Price Category 5	+$0
Price Category C	+$436
Price Category E	+$659

For 66" wide (66) or 72" wide (72)

Price Category B	+$378
Price Category 1	+$0
Price Category 2	+$77
Price Category 3	+$185
Price Category 4	+$320
Price Category 5	+$0
Price Category C	+$436
Price Category E	+$659

Pari Screen, Height Adjustable Tables Y1116.

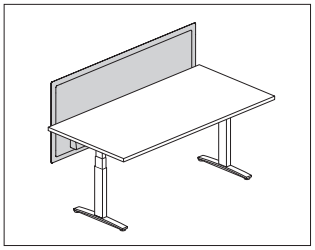

Product Information

Description

This screen attaches to an individual height adjustable work surface. It has an all-fabric, tackable surface with frameless design, and comes in privacy and modesty sizes. Attachment hardware included.

Notes

Privacy and modesty panel actual width is 2″ less than specified width.

Privacy screen (A) top edge aligns with the 42″ high Canvas datum line; bottom edge is 4″ below work surface.

Privacy & modesty screen (B) top edge aligns with the 42″ high Canvas datum line; bottom edge is 10″ below work surface.

Privacy screen (C) top edge aligns with the 46″ high Canvas datum line; bottom edge is 4″ below work surface.

Privacy & modesty screen (D) top edge aligns with the 46″ high Canvas datum line; bottom edge is 10″ below work surface.

Privacy screen (E) top edge aligns with the 53″ high Canvas datum line; bottom edge is 4″ below work surface.

Privacy & modesty screen (F) top edge aligns with the 53″ high Canvas datum line; bottom edge is 10″ below work surface.

Screens 54″ wide and wider include an additional 1″-wide center mounting bracket.

Recommended mounting creates a 1″ gap between back edge of surface and the screen to accommodate cable routing and the attachment or clamp-mounting of other hardware to the surface.

Optional cable management trough is only available when specifying privacy & modesty height option (B). Trough finish is graphite.

Attachment brackets are inset from edge of screen by approximately 8″ and require 2½″ of work surface for attachment.

Attachment bracket finish is painted graphite.

Screen accepts Customer's Own Material (COM). Yardage is estimated for nondirectional 54″-wide fabrics.

For vertical fabric direction (T):

Height—Yardage

A—1.51
B—1.89
C—1.76
D—2.14
E—2.21
F—2.58

For horizontal fabric direction (R):

Width—Yardage

For heights A/B:

24—0.88
30—1.07
36—1.26
42—1.45
48—1.64
54—1.83
60—2.02
66—2.21
72—2.39

For heights C/D/E/F:

24—1.76
30—2.14
36—2.52
42—2.90
48—3.28
54—3.65
60—4.03
66—4.41
72—4.79

For information on multiple quantities or directional fabrics, contact COM Department. See Order Information in Appendices.

MicrobeCare™ is an antimicrobial coating applied to the fabric surface of this product.

MicrobeCare™ protects products from mold, mildew, algae, and bacteria that cause deterioration, discoloration, odors, and stains.

MicrobeCare™ is registered with the US Environmental Protection Agency (EPA).

Dimensions

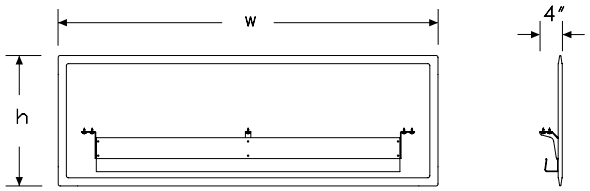

Pari Screen, Height Adjustable Tables *continued*

Specification Information	
Step 1.	
Y1116. A	

Step 2. Height	
A	privacy (42" high) A
B	privacy & modesty (42" high/10" below surface) A
C	privacy (46" high) A
D	privacy & modesty (46" high/10" below surface) A
E	privacy (53" high) A
F	privacy & modesty (53" high/10" below surface) A

Step 3. Width	
24	24" wide A
30	30" wide A
36	36" wide A
42	42" wide A
48	48" wide A
54	54" wide A
60	60" wide A
66	66" wide A
72	72" wide A

Step 4. Surface Material	
For 24" wide (24), 30" wide (30), 36" wide (36), 42" wide (42), or 48" wide (48)	
R	tackable fabric, horizontal A
T	tackable fabric A
D	tackable fabric, horizontal with MicrobeCare™ A
E	tackable fabric with MicrobeCare™ A
For 54" wide (54), 60" wide (60), 66" wide (66), or 72" wide (72)	
R	tackable fabric, horizontal A
D	tackable fabric, horizontal with MicrobeCare™ A

Prices for Steps 1-4.

		R	T	D	E
Y1116. A	**24**	$539	539	606	606
	30	$626	626	691	691
	36	$650	650	716	716
	42	$689	689	756	756
	48	$714	714	781	781
	54	$784	—	850	—
	60	$842	—	909	—
	66	$900	—	968	—
	72	$950	—	1015	—
B	**24**	$651	651	717	717
	30	$698	698	763	763
	36	$742	742	807	807
	42	$784	784	850	850
	48	$870	870	936	936
	54	$979	—	1045	—
	60	$1004	—	1070	—
	66	$1080	—	1147	—
	72	$1107	—	1174	—
C	**24**	$613	613	679	679
	30	$656	656	722	722
	36	$702	702	768	768
	42	$745	745	811	811
	48	$823	823	888	888
	54	$905	—	970	—
	60	$1008	—	1074	—
	66	$1057	—	1123	—
	72	$1100	—	1165	—
D	**24**	$788	788	853	853
	30	$830	830	896	896
	36	$874	874	940	940
	42	$918	918	984	984
	48	$987	987	1055	1055
	54	$1035	—	1101	—
	60	$1097	—	1163	—
	66	$1152	—	1218	—
	72	$1182	—	1247	—
E	**24**	$806	806	872	872
	30	$850	850	916	916
	36	$894	894	959	959
	42	$964	964	1031	1031
	48	$992	992	1059	1059
	54	$1048	—	1116	—
	60	$1069	—	1136	—
	66	$1096	—	1162	—
	72	$1121	—	1187	—
F	**24**	$888	888	954	954
	30	$931	931	998	998
	36	$976	976	1042	1042
	42	$1020	1020	1086	1086
	48	$1098	1098	1164	1164
	54	$1136	—	1201	—
	60	$1178	—	1244	—
	66	$1274	—	1339	—
	72	$1299	—	1365	—

Step 5. Cable Trough		
For privacy & modesty (42" high/10" below surface) (B), privacy & modesty (46" high/10" below surface) (D), or privacy & modesty (53" high/10" below surface) (F)		
NC	no cable way A	+$0
CW	cable way A	+$25

Step 6. Fabric	
Price Category 1	+$0
Price Category 2	+$23
Price Category 3	+$49
Price Category 4	+$96
Price Category 5	+$162
Price Category B	+$86
Price Category C	+$121
Price Category E	+$182

Pari Screen, Delineation FT354.

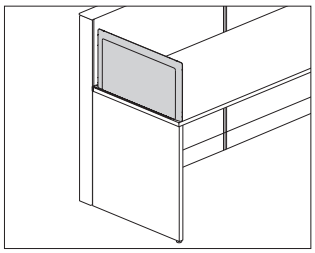

Product Information

Description

This tackable fabric screen attaches to a work surface either at the seam or at the right or left edge to provide division and boundary between workers. It attaches with no interference from supports below the work surface. Attachment hardware included.

Notes

Screen height is 13½″ or 17½″ above work surface, aligning with bead heights of 41″ and 45″.

Screen width matches work surface depths that have a 1″ gap at the back edge.

2 attachment methods ship with the end-of-run right handed (CR) and end-of-run left handed (CL) screen. The screen can be installed using the bracket, or using threaded screws that drill bayonets directly into the surface. See planning guide for exact location of holes.

End-of-run screen does not work on Canvas Beam.

See planning guide for applications and other compatible product lines.

Screen accepts Customer's Own Material (COM). Yardage is estimated for nondirectional 54″-wide fabrics.
For vertical fabric direction (T):
Height—Yardage
42—1.19
46—1.45
For horizontal fabric direction (R):
Width—Yardage
24—0.90
30—1.10
36—1.30
For information on multiple quantities or directional fabrics, contact COM Department. See Order Information in Appendices.

Dimensions

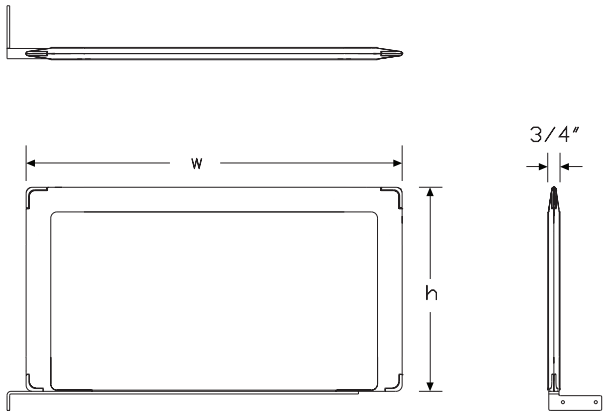

Specification Information	
Step 1.	
FT354. A	

Step 2. Attachment Type	
CL	Canvas Surface Attached, End of Run Left Handed A
CR	Canvas Surface Attached, End of Run Right Handed A

Step 3. Height	
42	42″ high A
46	46″ high A

Step 4. Width	
24	24″ wide A
30	30″ wide A
36	36″ wide A

Step 5. Surface Material	
R	tackable fabric, horizontal A
T	tackable fabric A

Prices for Steps 1-5.

			24R	24T	30R	30T	36R	36T
FT354.	**CL**	**42**	$1105	1105	1143	1143	1176	1176
		46	$1163	1163	1208	1208	1256	1256
	CR	**42**	$1105	1105	1143	1143	1176	1176
		46	$1163	1163	1208	1208	1256	1256

Step 6. Bracket Finish		
8Q	folkstone grey A	+$0
91	white A	+$0
98	studio white A	+$0
BK	black A	+$0
G1	graphite A	+$0
SNA	satin aluminum A	+$10
SNB	satin bronze A	+$10
SNC	satin carbon A	+$10
WL	sandstone A	+$0
WN	warm grey neutral A	+$0

Step 7. Fabric	
Price Category 1	+$0
Price Category 2	+$20
Price Category 3	+$48
Price Category 4	+$84
Price Category 5	+$102
Price Category B	+$378
Price Category C	+$128
Price Category E	+$203

Pari Screen, Storage Attached FV360.

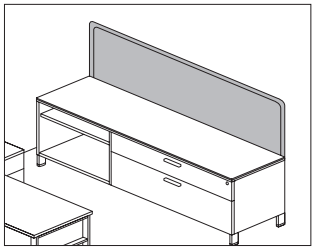

Product Information

Description

This tackable fabric screen attaches to a Canvas low credenza using the thin top and provides boundary with a tackable surface. Attachment hardware included.

Notes

Order credenza thin top separately:

- Credenza top for wood credenza (FF889.)
- Credenza top for metal credenza (FM889.)

Predrilled holes near back edge of credenza thin top allow for bayonets to extend up to support the screen.

Works with standard and powered Canvas credenzas.

Screen accepts Customer's Own Material (COM). Yardage is estimated for nondirectional 54"-wide fabrics.

For vertical fabric direction (T):

Height—Yardage

24—0.95

30—1.14

36—1.32

For horizontal fabric direction (R), for 42" high:

Width—Yardage

24—0.95

30—1.14

36—1.32

42—1.51

48—1.71

60—2.07

66—2.27

72—2.46

For horizontal fabric direction (R), for 46" high and 53" high:

Width—Yardage

24—1.90

30—2.27

36—2.66

42—3.02

48—3.41

60—4.17

66—4.54

72—4.92

For information on multiple quantities or directional fabrics, contact COM Department. See Order Information in Appendices.

Dimensions

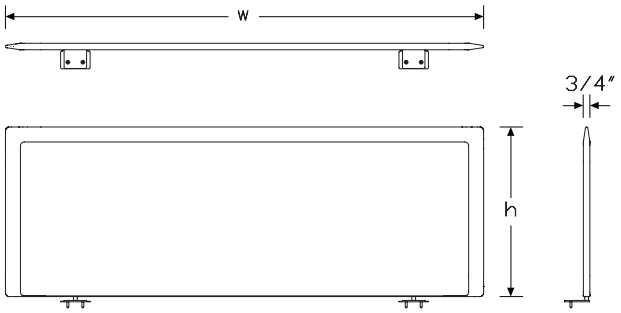

Pari Screen, Storage Attached

continued

Specification Information

Step 1.

FV360. A

Step 2. Attachment

CS Canvas credenza attached, single A

CB Canvas credenza attached, back to back A

Step 3. Height

42 42" high A

46 46" high A

53 53" high A

Step 4. Width

30 30" wide A

36 36" wide A

42 42" wide A

48 48" wide A

60 60" wide A

66 66" wide A

72 72" wide A

Step 5. Surface Material

For 30" wide (30), 36" wide (36), 42" wide (42), or 48" wide (48)

R tackable fabric, horizontal A

T tackable fabric A

For 60" wide (60), 66" wide (66), or 72" wide (72)

R tackable fabric, horizontal A

Prices for Steps 1-5.

		30R	30T	36R	36T	42R	42T
FV360. CS	**42**	$1035	1035	1076	1076	1139	1139
	46	$1076	1076	1203	1203	1265	1265
	53	$1265	1265	1329	1329	1539	1539
CB	**42**	$1035	1035	1076	1076	1139	1139
	46	$1076	1076	1203	1203	1265	1265
	53	$1265	1265	1329	1329	1539	1539

		48R	48T	60R	66R	72R
FV360. CS	**42**	$1329	1329	1518	1547	1582
	46	$1390	1390	1582	1672	1707
	53	$1644	1644	1834	1926	1959
CB	**42**	$1329	1329	1518	1547	1582
	46	$1390	1390	1582	1672	1707
	53	$1644	1644	1834	1926	1959

Step 6. Fabric

For 30" wide (30), 36" wide (36), or 42" wide (42)

Price Category B	+$113
Price Category 1	+$0
Price Category 2	+$37
Price Category 3	+$89
Price Category 4	+$152
Price Category 5	+$288
Price Category C	+$155
Price Category E	+$264

For 48" wide (48) or 60" wide (60)

Price Category B	+$188
Price Category 1	+$0
Price Category 2	+$46
Price Category 3	+$108
Price Category 4	+$187
Price Category 5	+$288
Price Category C	+$205
Price Category E	+$314

For 66" wide (66) or 72" wide (72)

Price Category B	+$262
Price Category 1	+$0
Price Category 2	+$61
Price Category 3	+$145
Price Category 4	+$253
Price Category 5	+$416
Price Category C	+$281
Price Category E	+$390

Pari Screen, Freestanding/ Surface Attached

FD300.

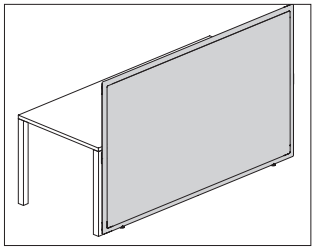

Product Information

Description

This tackable fabric screen is 42″ or 46″ high. It has an all fabric surface and a frameless edge. Includes 2 adjustable glides for leveling.

Notes

Screen can be freestanding when connected in 90° or 120° configurations. See planning guide for more information.

Screen can be connected inline (180°). See planning guide for connection rules.

Screen can be attached to:

- Canvas dock
- Table or surface
- Canvas low storage

Screen accepts Customer's Own Material (COM). Yardage is estimated for nondirectional 54″-wide fabrics.

For vertical fabric direction (T), for 42″ high:
Width—Yardage
15, 20—1.49
24, 30, 36, 42, 48—2.96

For vertical fabric direction (T), for 46″ high:
Width—Yardage
15, 20—1.60
24, 30, 36, 42, 48—3.22

For horizontal fabric direction (R), for 42″ high and 46″ high:
Width—Yardage
15—1.32
20—1.64
24—1.90
30—2.27
36—2.66
42—3.02

For horizontal fabric direction (R), for 42″ high:
Width—Yardage
48—3.41
54—3.78
60—4.17
66—4.54
72—4.92

For horizontal fabric direction (R), for 46″ high:
Width—Yardage
48—3.41
60—4.17
72—4.92

For information on multiple quantities or directional fabrics, contact COM Department. See Order Information in Appendices.

Dimensions

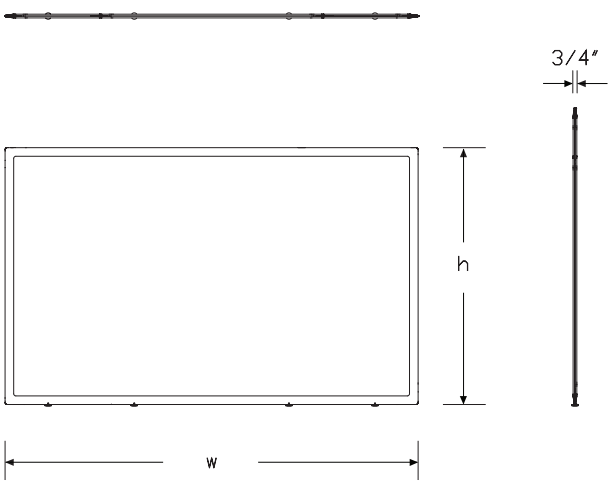

Specification Information

Step 1.

FD300. A

Step 2. Type

F	fabric/fabric

Step 3. Height

42	42″ high
46	46″ high

Step 4. Width

For 42" high (42)

15	15″ wide
20	20″ wide
24	24″ wide
30	30″ wide
36	36″ wide
42	42″ wide
48	48″ wide
54	54″ wide
60	60″ wide
66	66″ wide
72	72″ wide

For 46" high (46)

15	15″ wide
20	20″ wide
24	24″ wide
30	30″ wide
36	36″ wide
42	42″ wide
48	48″ wide
60	60″ wide
72	72″ wide

Step 5. Surface Material

For 15" wide (15), 20" wide (20), 24" wide (24), 30" wide (30), 36" wide (36), 42" wide (42), or 48" wide (48)

T	tackable fabric
R	tackable fabric, horizontal

For 54" wide (54), 60" wide (60), 72" wide (72), or 66" wide (66)

R	tackable fabric, horizontal

Prices for Steps 1-5.

		15T	15R	20T	20R	24T	24R
FD300. F	**42**	$1110	1110	1181	1181	1386	1386
	46	$1193	1193	1276	1276	1455	1455

		30T	30R	36T	36R	42T	42R
FD300. F	**42**	$1455	1455	1525	1525	1595	1595
	46	$1560	1560	1662	1662	1767	1767

		48T	48R	54R	60R	66R	72R
FD300. F	**42**	$1662	1662	1767	1871	2077	2216
	46	$1767	2077	—	2389	—	2562

Step 6. Fabric

For 42" high (42) or 46" high (46) with 15" wide (15), or 20" wide (20), or 24" wide (24)

Price Category B	+$138
Price Category 1	+$0
Price Category 2	+$29
Price Category 3	+$68
Price Category 4	+$119
Price Category 5	+$0
Price Category C	+$188
Price Category E	+$288

For 42" high (42) or 46" high (46) with 30" wide (30), or 36" wide (36), or 42" wide (42)

Price Category B	+$218
Price Category 1	+$0
Price Category 2	+$46
Price Category 3	+$108
Price Category 4	+$187
Price Category 5	+$0
Price Category C	+$298
Price Category E	+$0

For 42" high (42) or 46" high (46) with 48" wide (48), 54" wide (54), or 60" wide (60), or 72" wide (72), or 66" wide (66)

Price Category B	+$300
Price Category 1	+$0
Price Category 2	+$62
Price Category 3	+$149
Price Category 4	+$258
Price Category 5	+$0
Price Category C	+$410
Price Category E	+$0

Connection Hardware, Screens FD311.

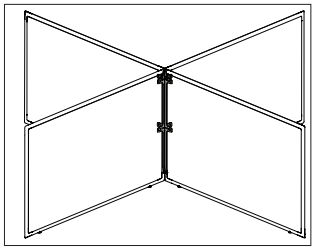

Product Information

Description

This painted metal hardware connects multiple freestanding screens in 90°, 120°, and 180° configurations.

Notes

Order Pari screen, freestanding/surface attached (FD300.) separately.

See planning guide for planning rules.

Dimensions

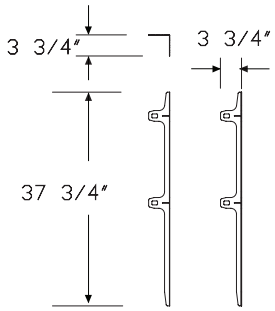

90 Degree 2 way

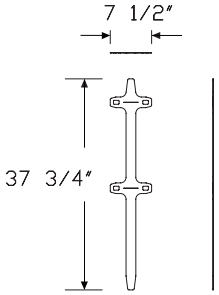

180 Degree 2 way

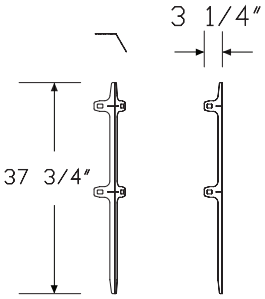

120 Degree 2 way

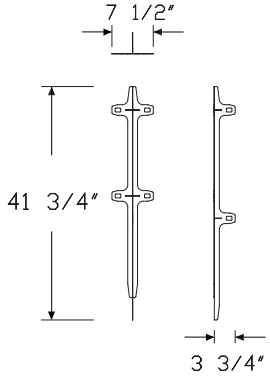

90 Degree 3 way

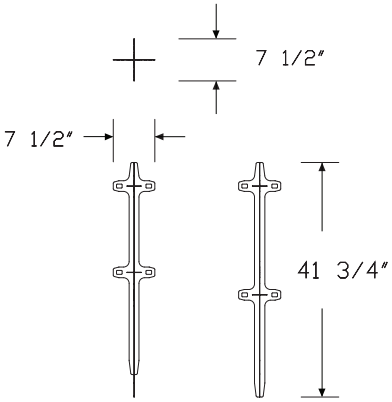

90 Degree 4 way

Specification Information
Step 1.
FD311. A

Step 2. Configuration	
1	90° connection - 2 screens
2	120° connection - 2 screens
3	3-way connection - 90°
4	4-way connection - 90°
5	180° connection - inline - 2 screens

Step 3. Height	
42	42″ high
46	46″ high

Prices for Steps 1-3.

		42	**46**
FD311.	**1**	$72	90
	2	$72	90
	3	$167	185
	4	$212	228
	5	$115	130

Step 4. Finish

Metallic Paint		
MS	metallic silver	+$0
SNA	satin aluminum	+$10
SNB	satin bronze	+$10
SNC	satin carbon	+$10

Sand Texture Paint		
BK	black	+$0
G1	graphite	+$0
WN	warm grey neutral	+$0

Smooth Paint		
8Q	folkstone grey	+$0
91	white	+$0
98	studio white	+$0
WL	sandstone	+$0

Bracket Hardware, Work Surface/ Low Storage

FD312.

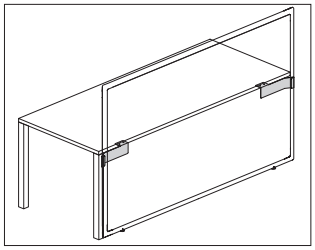

Product Information

Description

This metal hardware attaches Canvas freestanding screens to a work surface or Canvas low storage. Package of 2 brackets.

Notes

Used with fixed height surfaces.

Provides 1″ cable management gap between screen and back of surface or storage.

See planning guide for connection and support rules.

Dimensions

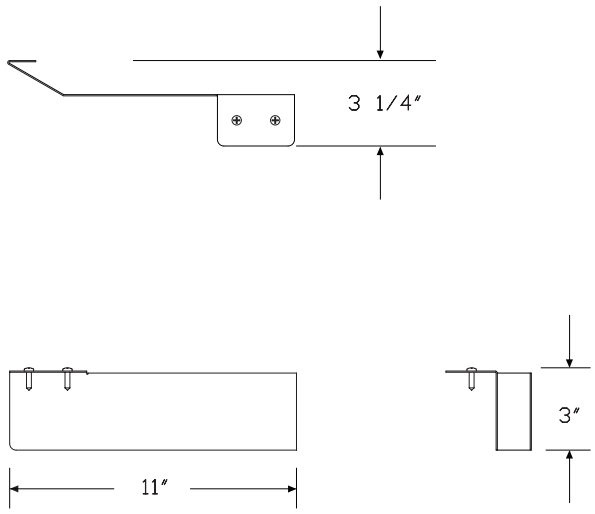

Specification Information

Step 1.

FD312. A

Step 2. Configuration

1	connection hardware to surface - pair
3	connection hardware to low storage

Prices for Steps 1-2.

FD312.	**1**	$231
	3	$231

Step 3. Finish

Metallic Paint

MS	metallic silver	+$0
SNA	satin aluminum	+$10
SNB	satin bronze	+$10
SNC	satin carbon	+$10

Sand Texture Paint

BK	black	+$0

Smooth Paint

8Q	folkstone grey	+$0
91	white	+$0
98	studio white	+$0
G1	graphite	+$0
WL	sandstone	+$0
WN	warm grey neutral	+$0

Dock to Screen Bracket, Screens FD313.

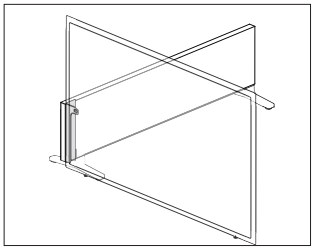

Product Information

Description

This bracket connects the Canvas freestanding screen to a Canvas dock wall run.

Notes

Bracket attaches on left or right end of dock. Handedness determined when user is facing the dock.

See planning guide for planning rules.

Dimensions

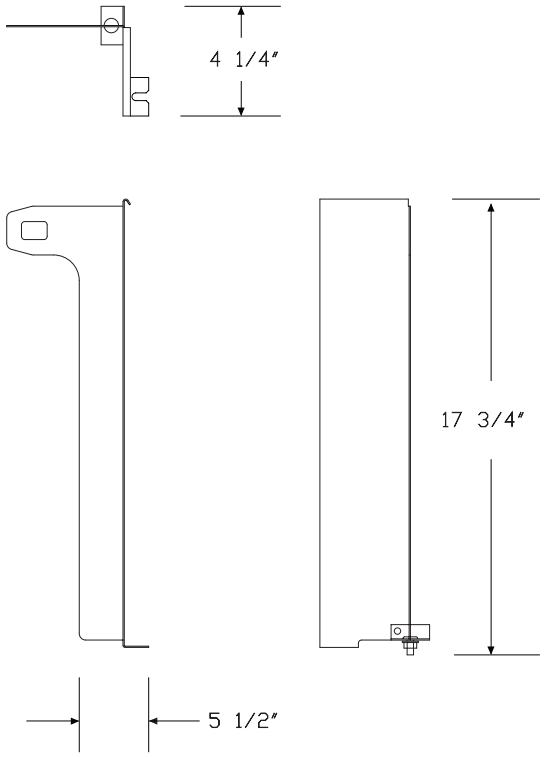

Specification Information

Step 1.

FD313. A

Step 2. Configuration

1	connection hardware to Canvas Dock

Step 3. Position

L	left
R	right

Prices for Steps 1-3.

	L	R
FD313. 1	$120	120

Step 4. Finish

Metallic Paint

MS	metallic silver	+$0
SNA	satin aluminum	+$10
SNB	satin bronze	+$10
SNC	satin carbon	+$10

Sand Texture Paint

8Q	folkstone grey	+$0
91	white	+$0
98	studio white	+$0
BK	black	+$0
G1	graphite	+$0
WL	sandstone	+$0
WN	warm grey neutral	+$0

Bracket Hardware, Screens to Renew Table FD314.

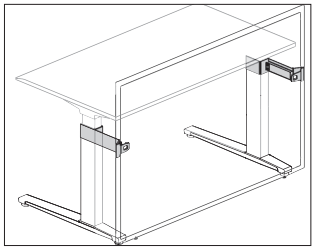

Product Information

Description

This pair of metal brackets attaches a Canvas freestanding/surface attached screen to the legs of a Renew™ table. Attachment hardware included.

Notes

Compatible with Renew table legs only.

Specify size to match depth of Renew table.

Dimensions

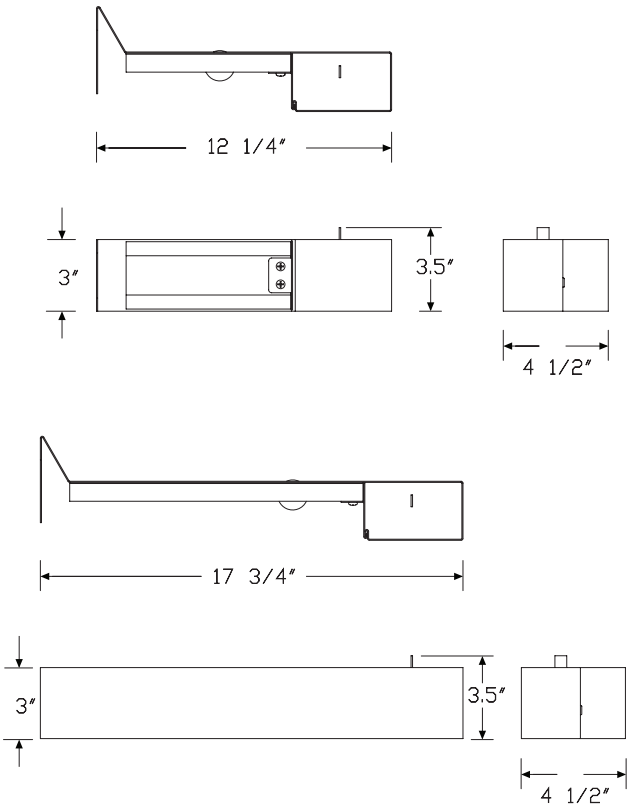

Specification Information

Step 1.

FD314. A

Step 2. Configuration

1	connection hardware to Renew table leg - pair

Step 3. Size

24C	24″ deep renew table - C Foot
30C	30″ deep renew table - C Foot
30T	30″ deep renew table - T Foot

Prices for Steps 1-3.

	24C	30C	30T
FD314. 1	$272	272	272

Step 4. Finish

Metallic Paint

MS	metallic silver	+$0
SNA	satin aluminum	+$10
SNB	satin bronze	+$10
SNC	satin carbon	+$10

Sand Texture Paint

8Q	folkstone grey	+$0
91	white	+$0
98	studio white	+$0
BK	black	+$0
G1	graphite	+$0
WL	sandstone	+$0
WN	warm grey neutral	+$0

Bracket Hardware, Pari Freestanding Screen/Low Credenza

FD315.

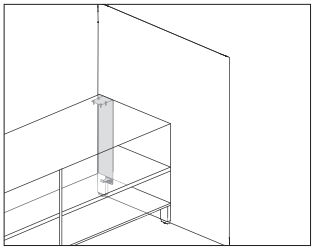

Product Information

Description

This metal hardware attaches Canvas freestanding screens perpendicularly to Canvas low storage.

Notes

See planning guide for connection and support rules.

Dimensions

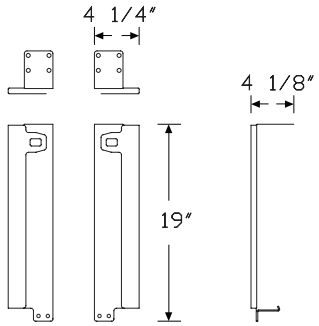

Wooden Attachments

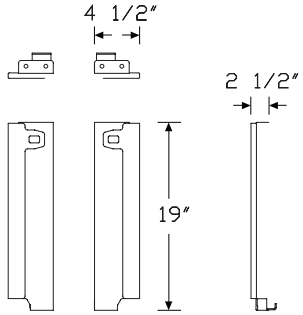

Metal Attachments

Specification Information

Step 1.

FD315. A

Step 2. Storage Type

W	for use with wood low credenza with 4″ high foot
M	for use with metal low credenza with 4″ high foot

Step 3. Credenza Attachment Location

L	left end of credenza
R	right end of credenza

Prices for Steps 1-3.

		L	R
FD315.	**W**	$182	182
	M	$182	182

Step 4. Finish

Metallic Paint

MS	metallic silver	+$0
SNA	satin aluminum	+$10
SNB	satin bronze	+$10
SNC	satin carbon	+$10

Sand Texture Paint

91	white	+$0
BK	black	+$0
G1	graphite	+$0

Flat Edge Screen, Dock Mounted FD116.

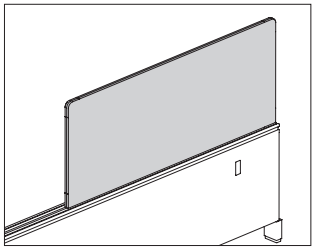

Product Information

Description

This tackable fabric screen attaches anywhere along the top rail of the 22" high Canvas dock to extend the overall height and to provide boundary with a tackable surface. Attachment hardware included.

Notes

Screen accepts Customer's Own Material (COM). Yardage is estimated for nondirectional 54"-wide fabrics.
For vertical fabric direction (T):
Height—Yardage
20—1.58
24—1.84
31—2.27
35—2.53
For horizontal fabric direction (R), for 20" high and 24" high:
Width—Yardage
24—0.95
36—1.32
42—1.51
48—1.71
60—2.07
72—2.46
For horizontal fabric direction (R), for 31" high and 35" high:
Width—Yardage
24—1.90
36—2.66
42—3.02
48—3.41
60—4.17
72—4.92
For information on multiple quantities or directional fabrics, contact COM Department. See Order Information in Appendices.

Dimensions

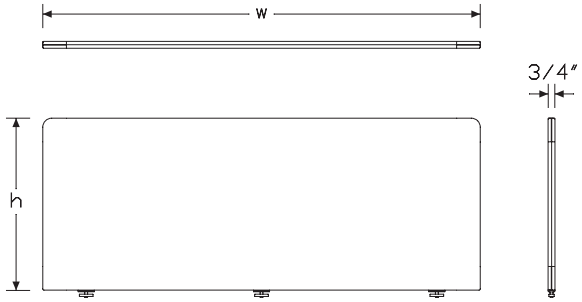

Flat Edge Screen, Dock Mounted

continued

Specification Information

Step 1.

FD116. A

Step 2. Fabric

F	fabric

Step 3. Height

20	20" high (to reach datum of 42"H)
24	24" high (to reach datum of 46"H)
31	31" high (to reach datum of 53"H)
35	35" high (to reach datum of 57"H)

Step 4. Width

24	24" wide
36	36" wide
42	42" wide
48	48" wide
60	60" wide
72	72" wide

Step 5. Surface Material

For 24" wide (24), 36" wide (36), 42" wide (42), or 48" wide (48)

T	tackable fabric
R	tackable fabric, horizontal

For 60" wide (60) or 72" wide (72)

R	tackable fabric, horizontal

Prices for Steps 1-5.

		24T	24R	36T	36R	42T	42R
FD116. F	**20**	$700	700	792	792	884	884
	24	$762	762	852	852	945	945
	31	$1006	1006	1100	1100	1190	1190
	35	$1129	1129	1220	1220	1314	1314

		48T	48R	60R	72R
FD116. F	**20**	$979	979	1067	1230
	24	$1038	1038	1129	1292
	31	$1285	1285	1375	1538
	35	$1409	1409	1497	1660

Step 6. Fabric

For 20" high (to reach datum of 42"H) (20) with 24" wide (24), or 36" wide (36)

Price Category B	+$198
Price Category 1	+$0
Price Category 2	+$16
Price Category 3	+$37
Price Category 4	+$64
Price Category 5	+$0
Price Category C	+$96
Price Category E	+$149

For 20" high (to reach datum of 42"H) (20) with 42" wide (42), or 48" wide (48)

Price Category B	+$198
Price Category 1	+$0
Price Category 2	+$22
Price Category 3	+$52
Price Category 4	+$89
Price Category 5	+$0
Price Category C	+$132
Price Category E	+$206

For 20" high (to reach datum of 42"H) (20) with 60" wide (60), or 72" wide (72)

Price Category B	+$284
Price Category 1	+$0
Price Category 2	+$24
Price Category 3	+$59
Price Category 4	+$102
Price Category 5	+$0
Price Category C	+$160
Price Category E	+$236

For 24" high (to reach datum of 46"H) (24) with 24" wide (24), or 36" wide (36)

Price Category B	+$198
Price Category 1	+$0
Price Category 2	+$24
Price Category 3	+$59
Price Category 4	+$102
Price Category 5	+$0
Price Category C	+$162
Price Category E	+$236

Flat Edge Screen, Dock Mounted

continued

For 24" high (to reach datum of 46"H) (24) with 42" wide (42), or 48" wide (48)

Price Category B	+$198
Price Category 1	+$0
Price Category 2	+$28
Price Category 3	+$66
Price Category 4	+$115
Price Category 5	+$0
Price Category C	+$178
Price Category E	+$268

For 24" high (to reach datum of 46"H) (24) with 60" wide (60), or 72" wide (72)

Price Category B	+$284
Price Category 1	+$0
Price Category 2	+$34
Price Category 3	+$80
Price Category 4	+$140
Price Category 5	+$0
Price Category C	+$212
Price Category E	+$323

For 31" high (to reach datum of 53"H) (31) with 24" wide (24), or 36" wide (36)

Price Category B	+$198
Price Category 1	+$0
Price Category 2	+$31
Price Category 3	+$73
Price Category 4	+$128
Price Category 5	+$0
Price Category C	+$194
Price Category E	+$296

For 31" high (to reach datum of 53"H) (31) with 42" wide (42), or 48" wide (48)

Price Category B	+$198
Price Category 1	+$0
Price Category 2	+$43
Price Category 3	+$103
Price Category 4	+$180
Price Category 5	+$0
Price Category C	+$271
Price Category E	+$415

For 31" high (to reach datum of 53"H) (31) with 60" wide (60), or 72" wide (72)

Price Category B	+$284
Price Category 1	+$0
Price Category 2	+$49
Price Category 3	+$118
Price Category 4	+$204
Price Category 5	+$0
Price Category C	+$310
Price Category E	+$472

For 35" high (to reach datum of 57"H) (35) with 24" wide (24), or 36" wide (36)

Price Category B	+$198
Price Category 1	+$0
Price Category 2	+$55
Price Category 3	+$132
Price Category 4	+$230
Price Category 5	+$0
Price Category C	+$350
Price Category E	+$533

For 35" high (to reach datum of 57"H) (35) with 42" wide (42), or 48" wide (48)

Price Category B	+$198
Price Category 1	+$0
Price Category 2	+$68
Price Category 3	+$162
Price Category 4	+$282
Price Category 5	+$0
Price Category C	+$426
Price Category E	+$652

For 35" high (to reach datum of 57"H) (35) with 60" wide (60), or 72" wide (72)

Price Category B	+$284
Price Category 1	+$0
Price Category 2	+$80
Price Category 3	+$191
Price Category 4	+$332
Price Category 5	+$0
Price Category C	+$504
Price Category E	+$768

Flat Edge Screen, Stanchion Infill FD437.

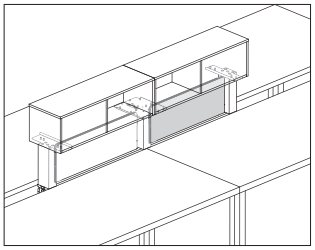

Product Information

Description

This tackable fabric screen fits between 2 stanchions below a dock mounted storage cabinet. Attachment hardware included.

Notes

Fabric infill is used between single or shared stanchions.

Fabric infill can be installed and removed with storage cabinet (FD415.) installed.

Specify fabric infill width to match the width of storage cabinet (FD415.).

An opening is created between infill and stanchion at each end of infill.

- Single stanchion at each end, openings are 3/4"
- Single stanchion at 1 end and shared stanchion at 1 end, openings are 1 1/4"
- Shared stanchion at each end, openings are 1 3/4"

Screen accepts Customer's Own Material (COM). Yardage is estimated for nondirectional 54"-wide fabrics.

For vertical fabric direction (T):

Height—Yardage

16—1.30

20—1.53

For horizontal fabric direction (R):

Width—Yardage

36—1.17

42—1.36

48—1.53

60—1.92

72—2.29

For information on multiple quantities or directional fabrics, contact COM Department. See Order Information in Appendices.

Dimensions

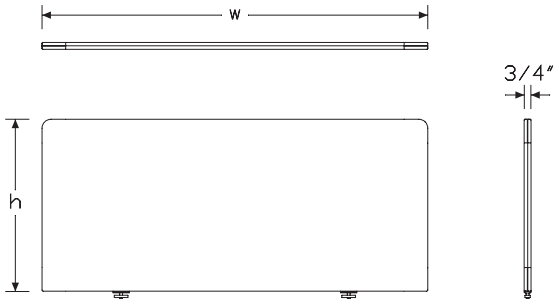

Specification Information

Step 1.

FD437. A

Step 2. Height

16	16" high for overhead storage at 53" high
20	20" high for overhead storage at 57" high

Step 3. Width

36	36" wide
42	42" wide
48	48" wide
60	60" wide
72	72" wide

Step 4. Surface Material

For 36" wide (36), 42" wide (42), or 48" wide (48)

R	tackable fabric, horizontal
T	tackable fabric

For 60" wide (60) or 72" wide (72)

R	tackable fabric, horizontal

Prices for Steps 1-4.

			R	T
FD437.	**16**	**36**	$848	848
		42	$956	956
		48	$1064	1064
		60	$1168	—
		72	$1348	—
	20	**36**	$916	916
		42	$1024	1024
		48	$1131	1131
		60	$1370	—
		72	$1551	—

Flat Edge Screen, Stanchion Infill

continued

Step 5. Fabric	
For 36" wide (36), 42" wide (42), or 48" wide (48)	
Price Category B	+$113
Price Category 1	+$0
Price Category 2	+$22
Price Category 3	+$50
Price Category 4	+$88
Price Category 5	+$0
Price Category C	+$127
Price Category E	+$234
For 60" wide (60) or 72" wide (72)	
Price Category B	+$149
Price Category 1	+$0
Price Category 2	+$37
Price Category 3	+$88
Price Category 5	+$0
Price Category C	+$223
Price Category E	+$234

Flat Edge Screen, Surface Attached with Modesty FT357.

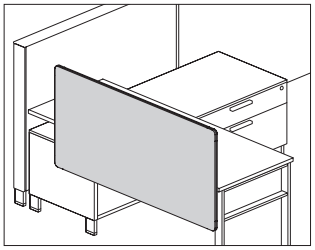

Product Information

Description

This tackable fabric screen attaches to a Canvas work surface to provide boundary and modesty with a tackable surface. An optional cable management trough is available. Trough finish is graphite. Attachment hardware included.

Notes

Screen heights are overall datum heights to align with Canvas Office Landscape®; they are not the actual heights of screens.
42"-high (A42) screen is a nominal 13" above work surface.
46"-high (A46) screen is a nominal 17" above work surface.
53"-high (A53) screen is a nominal 24" above work surface.

Screen widths are actual dimensions, and extend to the end of Canvas work surfaces.

Screen extends 9" below surface for modesty.

Screen can be flush with back edge of surface, or provide a 1" gap.

Screens 48" wide and wider include an additional 1"-wide center mounting bracket.

Screen accepts Customer's Own Material (COM). Yardage is estimated for nondirectional 54"-wide fabrics.
For vertical fabric direction (T):
Height—Yardage
42—1.90
46—2.14
53—2.59
For horizontal fabric direction (R):
Width—Yardage
40—2.87
42—3.02
46—3.22
48—3.41
52—3.63
54—3.78
60—4.17
66—4.54
72—4.92
For information on multiple quantities or directional fabrics, contact COM Department. See Order Information in Appendices.

Dimensions

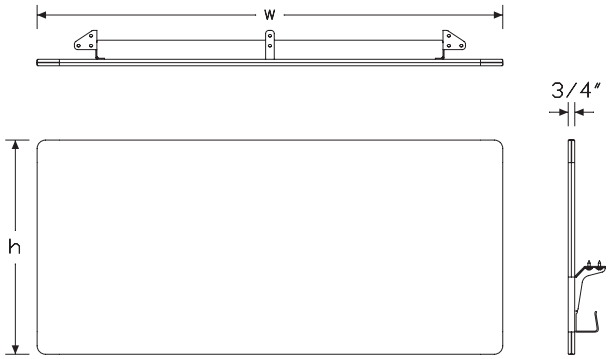

Flat Edge Screen, Surface Attached with Modesty *continued*

Specification Information

Step 1.

FT357.

Step 2. Attachment

C	Canvas surface attached

Step 3. Height

A42	42" high/9" below surface
A46	46" high/ 9" below surface
A53	53" high/ 9" below surface

Step 4. Width

40	39½" wide
42	42" wide
46	45½" wide
48	48" wide
52	51½" wide
54	54" wide
60	60" wide
66	66" wide
72	72" wide

Step 5. Surface Material

For 39½" wide (40), 42" wide (42), 45½" wide (46), or 48" wide (48)

R	tackable fabric, horizontal
T	tackable fabric

For 51½" wide (52), 54" wide (54), 60" wide (60), 66" wide (66), or 72" wide (72)

R	tackable fabric, horizontal

Prices for Steps 1-5.

		40R	40T	42R	42T	46R	46T
FT357. C	**A42**	$843	843	881	881	917	917
	A46	$1012	1012	1080	1080	1084	1084
	A53	$1208	1208	1236	1236	1242	1242

		48R	48T	52R	54R	60R	66R
FT357. C	**A42**	$931	931	974	979	1077	1105
	A46	$1095	1095	1135	1188	1204	1238
	A53	$1254	1254	1260	1268	1288	1396

		72R
FT357. C	**A42**	$1182
	A46	$1280
	A53	$1442

Step 6. Cable Trough

NC	no cable way	+$0
CW	cable way	+$25

Step 7. Cable Trough Finish

G2	graphite satin	+$0

Step 8. Bracket Finish

G2	graphite satin	+$0

Step 9. Fabric

For 39½" wide (40), 42" wide (42), 45½" wide (46), or 48" wide (48)

Price Category B	+$151
Price Category 1	+$0
Price Category 2	+$43
Price Category 3	+$103
Price Category 4	+$180
Price Category 5	+$260
Price Category C	+$356
Price Category E	+$539

For 51½" wide (52), 54" wide (54), 60" wide (60), 66" wide (66), or 72" wide (72)

Price Category B	+$262
Price Category 1	+$0
Price Category 2	+$62
Price Category 3	+$148
Price Category 4	+$257
Price Category 5	+$380
Price Category C	+$515
Price Category E	+$778

Surface-Attached Screen, Flat Edge Y1118.

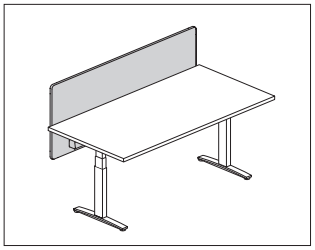

Product Information

Description

This surface-attached tackable screen attaches to an individual table, desk, or work surface. It has a frameless all-fabric design with a flat edge, and comes in privacy and modesty sizes. Attachment hardware included.

Notes

Privacy and modesty panel actual width is 2″ less than specified width.

Privacy screen (A) top edge is 13″ above top of work surface; bottom edge is 3¾″ below work surface.

Privacy & modesty screen (B) top edge is 13″ above top of work surface; bottom edge is 10″ below work surface.

Privacy screen (A) top edge aligns with the 42″ high Canvas datum line; bottom edge is 4″ below work surface.

Privacy & modesty screen (B) top edge aligns with the 42″ high Canvas datum line; bottom edge is 9″ below work surface.

Privacy screen (C) top edge aligns with the 46″ high Canvas datum line; bottom edge is 4″ below work surface.

Privacy & modesty screen (D) top edge aligns with the 46″ high Canvas datum line; bottom edge is 9″ below work surface.

Privacy screen (E) top edge aligns with the 53″ high Canvas datum line; bottom edge is 4″ below work surface.

Privacy & modesty screen (F) top edge aligns with the 53″ high Canvas datum line; bottom edge is 9″ below work surface.

Screens 54″ wide and wider include an additional 1″-wide center mounting bracket.

Recommended mounting creates a 1″ gap between back edge of surface and the screen to accommodate cable routing and the attachment or clamp-mounting of other hardware to the surface.

Optional cable management trough is only available when specifying privacy & modesty height option (B). Trough finish is graphite.

Attachment brackets are inset from edge of screen by approximately 8″ and require 2½″ of work surface for attachment.

Attachment bracket finish is painted graphite.

Screen accepts Customer's Own Material (COM). Yardage is estimated for nondirectional 54″-wide fabrics.

For vertical fabric direction (T):

Height—Yardage

A—1.51
B—1.89
C—1.76
D—2.14
E—2.21
F—2.58

For horizontal fabric direction (R):

Width—Yardage

For heights A/B:

24—0.88
30—1.07
36—1.26
42—1.45
48—1.64
54—1.83
60—2.02
66—2.21
72—2.39

For heights C/D/E/F:

24—1.76
30—2.14
36—2.52
42—2.90
48—3.28
54—3.65
60—4.03
66—4.41
72—4.79

For information on multiple quantities or directional fabrics, contact COM Department. See Order Information in Appendices.

MicrobeCare™ is an antimicrobial coating applied to the fabric surface of this product.

MicrobeCare™ protects products from mold, mildew, algae, and bacteria that cause deterioration, discoloration, odors, and stains.

MicrobeCare™ is registered with the US Environmental Protection Agency (EPA).

Dimensions

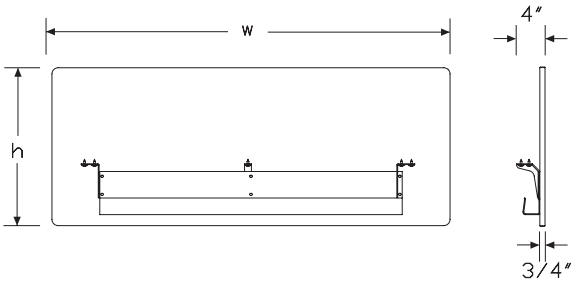

Surface-Attached Screen, Flat Edge *continued*

Specification Information	
Step 1.	
Y1118. A	
Step 2. Height	
A	privacy (42" high) A
B	privacy & modesty (42" high/ 9" below surface) A
C	privacy (46" high) A
D	privacy & modesty (46" high/ 9" below surface) A
E	privacy (53" high) A
F	privacy & modesty (53" high/ 9" below surface) A
Step 3. Width	
24	24" wide A
30	30" wide A
36	36" wide A
42	42" wide A
48	48" wide A
54	54" wide A
60	60" wide A
66	66" wide A
72	72" wide A
Step 4. Surface Material	
For 24" wide (24), 30" wide (30), 36" wide (36), 42" wide (42), or 48" wide (48)	
R	tackable fabric, horizontal A
T	tackable fabric A
D	tackable fabric, horizontal with MicrobeCare™ A
E	tackable fabric with MicrobeCare™ A
For 54" wide (54), 60" wide (60), 66" wide (66), or 72" wide (72)	
R	tackable fabric, horizontal A
D	tackable fabric, horizontal with MicrobeCare™ A

Prices for Steps 1-4.

		R	T	D	E
Y1118. A	**24**	$375	375	441	441
	30	$405	405	471	471
	36	$483	483	550	550
	42	$520	520	586	586
	48	$557	557	622	622
	54	$592	—	657	—
	60	$642	—	708	—
	66	$672	—	738	—
	72	$716	—	782	—
B	**24**	$467	467	532	532
	30	$503	503	570	570
	36	$539	539	606	606
	42	$577	577	643	643
	48	$607	607	674	674
	54	$640	—	705	—
	60	$662	—	728	—
	66	$722	—	789	—
	72	$776	—	842	—
C	**24**	$468	468	534	534
	30	$516	516	582	582
	36	$555	555	621	621
	42	$611	611	677	677
	48	$685	685	750	750
	54	$721	—	788	—
	60	$806	—	872	—
	66	$848	—	913	—
	72	$909	—	975	—
D	**24**	$588	588	655	655
	30	$656	656	722	722
	36	$732	732	797	797
	42	$748	748	815	815
	48	$779	779	846	846
	54	$801	—	866	—
	60	$887	—	953	—
	66	$959	—	1026	—
	72	$999	—	1065	—
E	**24**	$638	638	703	703
	30	$647	647	713	713
	36	$665	665	731	731
	42	$781	781	848	848
	48	$808	808	875	875
	54	$829	—	895	—
	60	$866	—	932	—
	66	$944	—	1011	—
	72	$1005	—	1071	—
F	**24**	$772	772	838	838
	30	$781	781	848	848
	36	$795	795	861	861
	42	$808	808	875	875
	48	$819	819	886	886
	54	$830	—	896	—
	60	$918	—	984	—
	66	$965	—	1032	—
	72	$1166	—	1232	—

Surface-Attached Screen, Flat Edge *continued*

Step 5. Cable Trough		
For privacy & modesty (42" high/ 9" below surface) (B), privacy & modesty (46" high/ 9" below surface) (D), or privacy & modesty (53" high/ 9" below surface) (F)		
NC	no cable way A	+$0
CW	cable way A	+$25

Step 6. Fabric	
Price Category 1	+$0
Price Category 2	+$25
Price Category 3	+$59
Price Category 4	+$112
Price Category 5	+$146
Price Category B	+$97
Price Category C	+$133
Price Category E	+$182

For tackable fabric, horizontal (R) or tackable fabric, horizontal with MicrobeCare™ (D)	
Price Category 1	+$0
Price Category 2	+$25
Price Category 3	+$59
Price Category 4	+$112
Price Category 5	+$146
Price Category B	+$97
Price Category C	+$133
Price Category E	+$182

Flat Edge Screen, Delineation FT358.

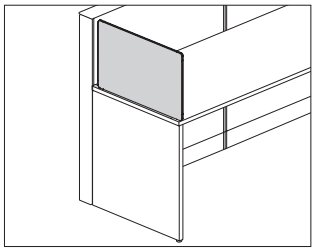

Product Information

Description

This tackable fabric screen attaches to a work surface at the right or left edge to provide division and boundary between workers. It attaches with no interference from supports below the work surface. Attachment hardware included.

Notes

Screen height is 13½″ or 17½″ above work surface, aligning with bead heights of 41″ and 45″.

Screen width matches work surface depths that have a 1″ gap at the back edge.

2 attachment methods ship with the end-of-run right handed (CR) and end-of-run left handed (CL) screen. The screen can be installed using the bracket, or using threaded screws that drill bayonets directly into the surface. See planning guide for exact location of holes.

End-of-run screen does not work on Canvas Beam.

See planning guide for applications and other compatible product lines.

Screen accepts Customer's Own Material (COM). Yardage is estimated for nondirectional 54″-wide fabrics.
For vertical fabric direction (T):
Height—Yardage
42—1.19
46—1.45
For horizontal fabric direction (R):
Width—Yardage
24—0.90
30—1.10
36—1.30
For information on multiple quantities or directional fabrics, contact COM Department. See Order Information in Appendices.

Dimensions

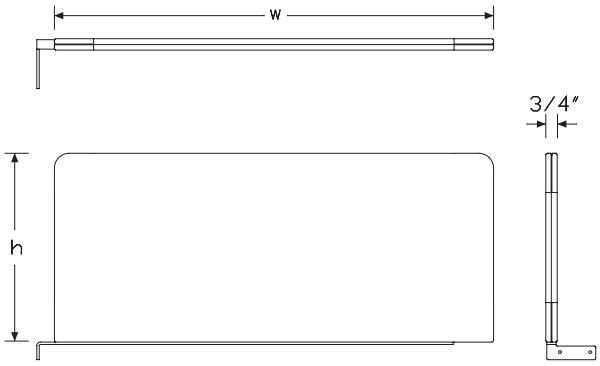

Flat Edge Screen, Delineation

continued

Specification Information
Step 1.
FT358.

Step 2. Attachment Type	
CL	Canvas Surface Attached, End of Run Left Handed
CR	Canvas Surface Attached, End of Run Right Handed

Step 3. Height	
42	42″ high
46	46″ high

Step 4. Width	
24	24″ wide
30	30″ wide
36	36″ wide

Step 5. Surface Material	
R	tackable fabric, horizontal
T	tackable fabric

Prices for Steps 1-5.

			24R	24T	30R	30T	36R	36T
FT358.	**CL**	**42**	$685	685	724	724	738	738
		46	$745	745	789	789	816	816
	CR	**42**	$685	685	724	724	738	738
		46	$745	745	789	789	816	816

Step 6. Bracket Finish		
8Q	folkstone grey	+$0
91	white	+$0
98	studio white	+$0
BK	black	+$0
G1	graphite	+$0
SNA	satin aluminum	+$10
SNB	satin bronze	+$10
SNC	satin carbon	+$10
WL	sandstone	+$0
WN	warm grey neutral	+$0

Step 7. Fabric	
Price Category 1	+$0
Price Category 2	+$20
Price Category 3	+$48
Price Category 4	+$84
Price Category 5	+$140
Price Category B	+$68
Price Category C	+$122
Price Category E	+$203

Flat Edge Screen, Storage Attached FV361.

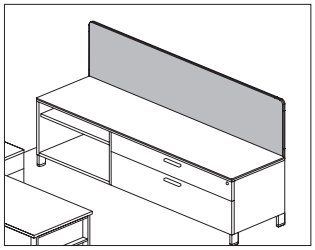

Product Information

Description

This tackable fabric screen attaches to a Canvas low credenza using the thin top and provides boundary with a tackable surface. Attachment hardware included.

Notes

Order credenza thin top separately:

- Credenza top for wood credenza (FF889.)
- Credenza top for metal credenza (FM889.)

Predrilled holes near back edge of credenza thin top allow for bayonets to extend up to support the screen.

Works with standard and powered Canvas credenzas.

Screen accepts Customer's Own Material (COM). Yardage is estimated for nondirectional 54"-wide fabrics.

For vertical fabric direction (T):

Height—Yardage
24—0.95
30—1.14
36—1.32

For horizontal fabric direction (R), for 42" high:

Width—Yardage
24—0.95
30—1.14
36—1.32
42—1.51
48—1.71
60—2.07
66—2.27
72—2.46

For horizontal fabric direction (R), for 46" high and 53" high:

Width—Yardage
24—1.90
30—2.27
36—2.66
42—3.02
48—3.41
60—4.17
66—4.54
72—4.92

For information on multiple quantities or directional fabrics, contact COM Department. See Order Information in Appendices.

Dimensions

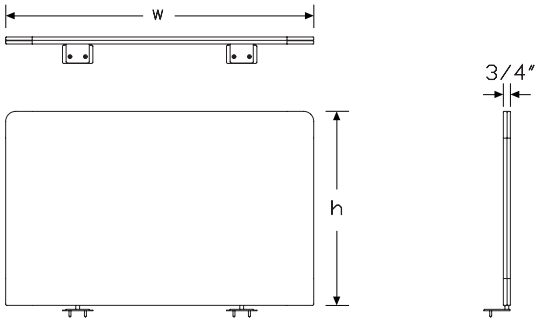

Flat Edge Screen, Storage Attached *continued*

Specification Information

Step 1.

FV361.

Step 2. Attachment

CB	Canvas credenza attached, back to back
CS	Canvas credenza attached, single

Step 3. Height

42	42" high
46	46" high
53	53" high

Step 4. Width

30	30" wide
36	36" wide
42	42" wide
48	48" wide
60	60" wide
66	66" wide
72	72" wide

Step 5. Surface Material

For 30" wide (30), 36" wide (36), 42" wide (42), or 48" wide (48)

R	tackable fabric, horizontal
T	tackable fabric

For 60" wide (60), 66" wide (66), or 72" wide (72)

R	tackable fabric, horizontal

Prices for Steps 1-5.

			30R	30T	36R	36T	42R	42T
FV361.	**CB**	**42**	$943	943	1020	1020	1094	1094
		46	$983	983	1145	1145	1221	1221
		53	$1174	1174	1272	1272	1493	1493
	CS	**42**	$943	943	1020	1020	1094	1094
		46	$983	983	1145	1145	1221	1221
		53	$1174	1174	1272	1272	1493	1493

			48R	48T	60R	66R	72R
FV361.	**CB**	**42**	$1171	1171	1245	1323	1398
		46	$1233	1233	1308	1450	1524
		53	$1524	1524	1561	1700	1777
	CS	**42**	$1171	1171	1245	1323	1398
		46	$1233	1233	1308	1450	1524
		53	$1524	1524	1561	1700	1777

Step 6. Fabric

For 30" wide (30), 36" wide (36), 42" wide (42), or 48" wide (48)

Price Category B	+$113
Price Category 1	+$0
Price Category 2	+$37
Price Category 3	+$89
Price Category 4	+$152
Price Category 5	+$276
Price Category C	+$155
Price Category E	+$264

For 60" wide (60), 66" wide (66), or 72" wide (72)

Price Category B	+$188
Price Category 1	+$0
Price Category 2	+$46
Price Category 3	+$108
Price Category 5	+$221
Price Category C	+$205
Price Category E	+$314

Marker Board, Screen Attached, Acrylic FD126.

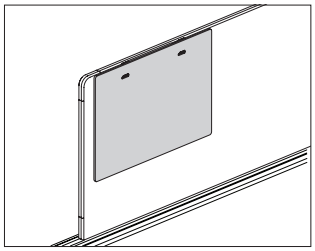

Product Information

Description

This acrylic marker board hangs on an existing screen with a bracket optimized for Pari or flat-edge screens. Marker board can be removed from the bracket for portability.

Notes

Order fabric screen separately.

Marker board hangs on the top edge of the fabric screen.

Marker board is not magnetic.

Marker board does not have trim.

Dimensions

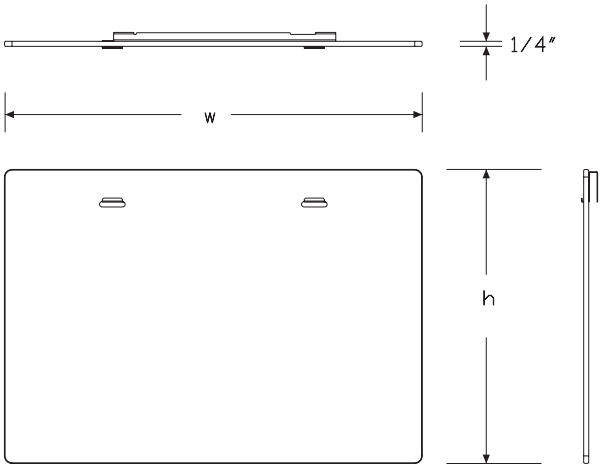

Specification Information

Step 1.

FD126. A

Step 2. Type

F	flat edge screen profile
P	Pari screen profile

Step 3. Height

15	15" high

Step 4. Width

24	24" wide
30	30" wide

Prices for Steps 1-4.

			24	**30**
FD126.	**F**	**15**	$587	632
	P	**15**	$587	632

Step 5. Bracket Finish

CN	metallic champagne	+$0
EH	metallic bronze	+$0
MS	metallic silver	+$0
SNA	satin aluminum	+$10
SNB	satin bronze	+$10
SNC	satin carbon	+$10
8Q	folkstone grey	+$0
91	white	+$0
98	studio white	+$0
CL	cool grey neutral	+$0
G1	graphite	+$0
WL	sandstone	+$0
WN	warm grey neutral	+$0

Metal Marker Board, Fabric Screen Attached

Y1123.

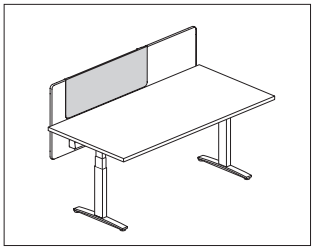

Product Information

Description

This magnetic metal board overlays an existing Pari™ or flat-edge fabric screen. It has a frameless, all-metal design with a straight edge. It accepts magnets and can be dry-erase marker writable when specified as a marker board.

Notes

Order Pari or flat edge profile fabric screen separately.

Metal board hangs on top edge of Pari or flat edge fabric screen.

When specifying marker board (Y1123.M) option, the marker board is an included applique magnetically applied in the field.

Board with tray (Y1123.xxxxxT) option comes with an angled 3/4″ lip at bottom of board.

For optimal use, pair with dark fabric screens.

Order the following accessories separately:

- Magnetic document clip (YT400.)
- Magnetic name tag (YT410.05M)
- Pari screen, height adjustable table (Y1116.)
- Surface attached screen, flat edge (Y1118.)

Dimensions

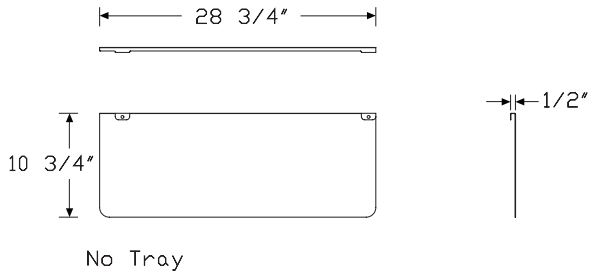

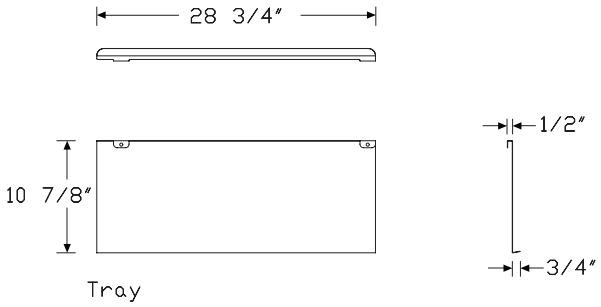

Specification Information

Step 1.

Y1123. A

Step 2. Type

P	painted metal A
M	marker board A

Step 3. Height

11	11″ high A

Step 4. Width

24	24″ wide A
30	30″ wide A

Step 5. Tray

N	no tray A
T	tray A

Prices for Steps 1-5.

		24N	24T	30N	30T
Y1123. P 11		$170	170	182	182
M 11		$238	238	265	265

Step 6. Finish

Metallic Paint

MS	metallic silver A	+$0
SNB	satin bronze A	+$10

Sand Texture Paint

91	white A	+$0
G1	graphite A	+$0

Laminate Screen, Dock Mounted FD120.

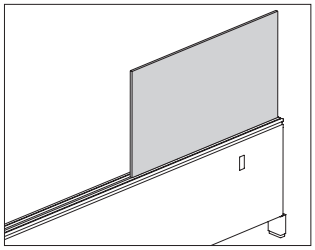

Product Information

Description

This laminate screen attaches anywhere along the top rail of the 22"-high Canvas dock to extend the overall height and to provide boundary. Attachment hardware included.

Dimensions

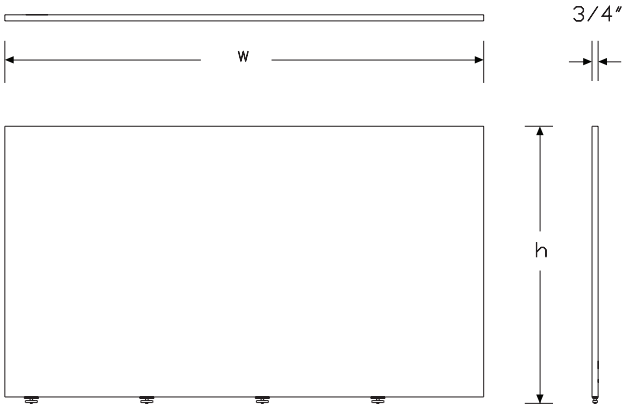

Specification Information

Step 1.

FD120. A

Step 2. Height

20	20" high (to reach datum of 42"H)
24	24" high (to reach datum of 46"H)
31	31" high (to reach datum of 53"H)
35	35" high (to reach datum of 57"H)

Step 3. Width

24	24" wide
36	36" wide
42	42" wide
48	48" wide
60	60" wide
72	72" wide

Step 4. Surface Material

L	high-pressure laminate/thermoplastic edge
U	high-pressure laminate/universal edge

Prices for Steps 1-4.

			L	U
FD120.	**20**	**24**	$611	611
		36	$696	696
		42	$779	779
		48	$863	863
		60	$945	945
		72	$1016	1016
	24	**24**	$674	674
		36	$760	760
		42	$843	843
		48	$927	927
		60	$1008	1008
		72	$1081	1081
	31	**24**	$932	932
		36	$1015	1015
		42	$1100	1100
		48	$1182	1182
		60	$1267	1267
		72	$1339	1339

35 24	$1061	1061
36	$1144	1144
42	$1228	1228
48	$1310	1310
60	$1395	1395
72	$1467	1467

Step 5. Grain Direction

For 24" wide (24), 36" wide (36), 42" wide (42), 48" wide (48), or 60" wide (60)

HRG	horizontal grain	+$0
VTG	vertical grain	+$0

For 72" wide (72)

HRG	horizontal grain	+$0

Step 6. Surface Finish

76	light brown walnut	+$0
8Q	folkstone grey	+$0
91	white	+$0
98	studio white	+$0
CL	cool grey neutral	+$0
HM	natural maple	+$0
HP	light anigre	+$0
HX	aged cherry	+$0
LBA	clear on ash	+$0
LBB	oak on ash	+$0
LBC	walnut on ash	+$0
LBF	neutral twill	+$0
LBJ	graphite twill	+$0
LBQ	white twill	+$0
LBR	phantom ecru	+$0
LBS	phantom cocoa	+$0
LBU	medium matte walnut	+$0
LBV	warm grey teak	+$0
LU	soft white	+$0
WL	sandstone	+$0
WN	warm grey neutral	+$0
125	natural maple A	+$0
126	natural cherry A	+$0
127	walnut A	+$0
139	light ash A	+$0
140	warm ash A	+$0
28	canyon A	+$0
29	misted A	+$0
38	twilight A	+$0
39	desert A	+$0
BU	black umber A	+$0
HF	inner tone light A	+$0
HT	inner tone (discontinuing) A	+$0
LT	light tone A	+$0
ZZ	open line high-pressure laminate (nonstandard) A	+$50

Step 7. Edge Finish

For high-pressure laminate/thermoplastic edge (L)

76	light brown walnut	+$0
8Q	folkstone grey	+$0
91	white	+$0
98	studio white	+$0
BU	black umber	+$0
CL	cool grey neutral	+$0
HF	inner tone light	+$0
HM	natural maple	+$0
HP	light anigre	+$0
HX	aged cherry	+$0
LBA	clear on ash	+$0
LBB	oak on ash	+$0
LBC	walnut on ash	+$0
LBF	neutral twill	+$0
LBJ	graphite twill	+$0
LBQ	white twill	+$0
LBR	phantom ecru	+$0
LBS	phantom cocoa	+$0
LBU	medium matte walnut	+$0
LBV	warm grey teak	+$0
LU	soft white	+$0
WL	sandstone	+$0
WN	warm grey neutral	+$0

Laminate Screen, Dock Mounted

continued

For high-pressure laminate/thermoplastic edge (L)		
125	natural maple A	+$0
126	natural cherry A	+$0
127	walnut A	+$0
139	light ash A	+$0
140	warm ash A	+$0
28	canyon A	+$0
29	misted A	+$0
38	twilight A	+$0
39	desert A	+$0
G2	graphite satin A	+$0
HT	inner tone (discontinuing) A	+$0
LT	light tone A	+$0
SG	slate grey A	+$0
X1	chalk white A	+$0

For high-pressure laminate/universal edge (U)		
PLY	plywood edge	+$50

Laminate Screen, Surface Attached

FT360.

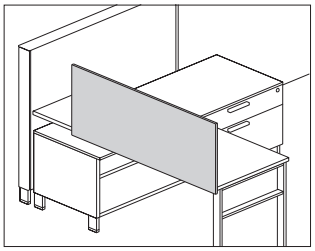

Product Information

Description

This laminate screen attaches to a Canvas work surface to provide boundary. Attachment hardware included.

Notes

Screen widths are actual dimensions; screens extend to the ends of Canvas work surfaces.

Screen extends 4" below surface to hide attachment hardware.

Screen can be flush with back edge of surface, or provide a 1" gap.

Screens 48" wide and wider include an additional 1"-wide center mounting bracket.

Dimensions

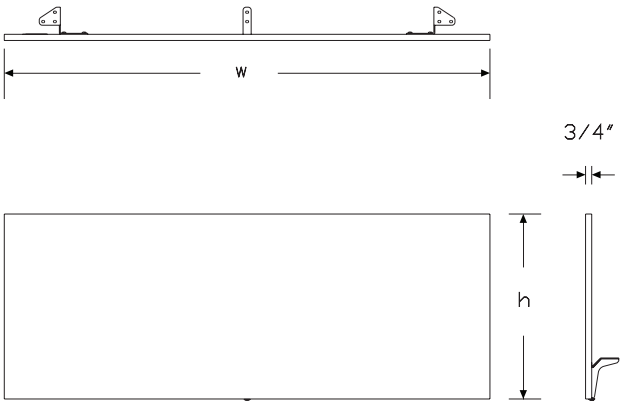

Specification Information

Step 1.

FT360.

Step 2. Attachment

C	Canvas surface attached

Step 3. Height

42	42" high
46	46" high

Step 4. Width

39A	39½" wide
42	42" wide
45A	45½" wide
48	48" wide
51A	51½" wide
54	54" wide
60	60" wide
66	66" wide
72	72" wide

Step 5. Surface Material

L	thermally-fused laminate
U	thermally-fused laminate/universal edge

Prices for Steps 1-5.

		39AL	39AU	42L	42U	45AL	45AU
FT360. C	**42**	$480	480	490	490	503	503
	46	$592	592	604	604	615	615

		48L	48U	51AL	51AU	54L	54U
FT360. C	**42**	$516	516	530	530	540	540
	46	$629	629	640	640	654	654

		60L	60U	66L	66U	72L	72U
FT360. C	**42**	$553	553	599	599	630	630
	46	$664	664	717	717	746	746

Step 6. Grain Direction

For 39½" wide (39A), 42" wide (42), 45½" wide (45A), 48" wide (48), 51½" wide (51A), 54" wide (54), or 60" wide (60)

VTG	vertical grain	+$0
HRG	horizontal grain	+$0

Laminate Screen, Surface Attached *continued*

For 66" wide (66) or 72" wide (72)		
HRG	horizontal grain	+$0

Step 7. Bracket Finish		
G2	graphite satin	+$0

Step 8. Surface Finish		
76	light brown walnut	+$0
8Q	folkstone grey	+$0
91	white	+$0
98	studio white	+$0
CL	cool grey neutral	+$0
HM	natural maple	+$0
HP	light anigre	+$0
HX	aged cherry	+$0
LBA	clear on ash	+$0
LBB	oak on ash	+$0
LBC	walnut on ash	+$0
LBF	neutral twill	+$0
LBJ	graphite twill	+$0
LBQ	white twill	+$0
LBR	phantom ecru	+$0
LBS	phantom cocoa	+$0
LBU	medium matte walnut	+$0
LBV	warm grey teak	+$0
LU	soft white	+$0
WL	sandstone	+$0
WN	warm grey neutral	+$0

Step 9. Edge Finish		
For thermally-fused laminate (L)		
76	light brown walnut	+$0
8Q	folkstone grey	+$0
91	white	+$0
98	studio white	+$0
BU	black umber	+$0
CL	cool grey neutral	+$0
HF	inner tone light	+$0
HM	natural maple	+$0
HP	light anigre	+$0
HX	aged cherry	+$0
LBA	clear on ash	+$0
LBR	phantom ecru	+$0
LBS	phantom cocoa	+$0
LBU	medium matte walnut	+$0
LBV	warm grey teak	+$0
LBB	oak on ash	+$0
LBC	walnut on ash	+$0
LBF	neutral twill	+$0
LBJ	graphite twill	+$0
LBQ	white twill	+$0
LU	soft white	+$0
WL	sandstone	+$0
WN	warm grey neutral	+$0
For thermally-fused laminate/universal edge (U)		
PLY	plywood edge	+$50

Laminate Screen, Surface Attached with Modesty FT361.

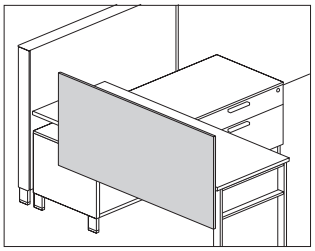

Product Information

Description

This laminate screen attaches to a Canvas work surface to provide boundary and modesty. An optional cable management trough is available. Trough finish is graphite. Attachment hardware included.

Notes

Screen widths are actual dimensions; screens extend to the ends of Canvas work surfaces.

Screen extends 9" below surface for modesty.

Screen can be flush with back edge of surface, or provide a 1" gap.

Screens 48" wide and wider include an additional 1"-wide center mounting bracket.

Dimensions

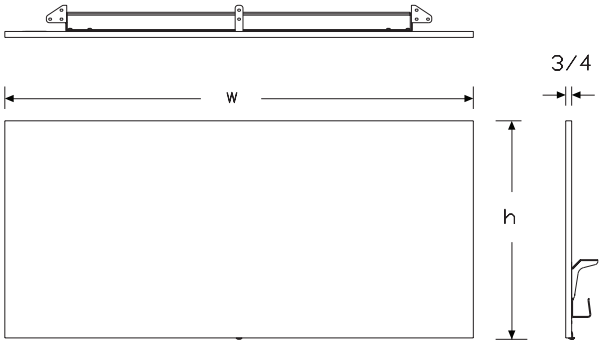

Specification Information

Step 1.

FT361.

Step 2. Attachment

C Canvas surface attached

Step 3. Height

A42 42" high/9" below surface

A46 46" high/ 9" below surface

Step 4. Width

39A 39½" wide

42 42" wide

45A 45½" wide

48 48" wide

51A 51½" wide

54 54" wide

60 60" wide

66 66" wide

72 72" wide

Step 5. Surface Material

L thermally-fused laminate

U thermally-fused laminate/universal edge

Prices for Steps 1-5.

		39AL	39AU	42L	42U	45AL	45AU
FT361. C	**A42**	$518	518	533	533	545	545
	A46	$641	641	657	657	669	669

		48L	48U	51AL	51AU	54L	54U
FT361. C	**A42**	$560	560	571	571	585	585
	A46	$682	682	694	694	707	707

		60L	60U	66L	66U	72L	72U
FT361. C	**A42**	$598	598	642	642	671	671
	A46	$721	721	769	769	796	796

Step 6. Grain Direction

For 39½" wide (39A), 42" wide (42), 45½" wide (45A), 48" wide (48), 51½" wide (51A), 54" wide (54), or 60" wide (60)

VTG	vertical grain	+$0
HRG	horizontal grain	+$0

Laminate Screen, Surface Attached with Modesty *continued*

For 66" wide (66) or 72" wide (72)		
HRG	horizontal grain	+$0

Step 7. Cable Way		
CW	cable way	+$25
NC	no cable way	+$0

Step 8. Cable Way Finish		
For cable way (CW)		
G2	graphite satin	+$0

Step 9. Bracket Finish		
G2	graphite satin	+$0

Step 10. Surface Finish		
76	light brown walnut	+$0
8Q	folkstone grey	+$0
91	white	+$0
98	studio white	+$0
CL	cool grey neutral	+$0
HM	natural maple	+$0
HP	light anigre	+$0
HX	aged cherry	+$0
LBA	clear on ash	+$0
LBB	oak on ash	+$0
LBC	walnut on ash	+$0
LBF	neutral twill	+$0
LBJ	graphite twill	+$0
LBQ	white twill	+$0
LBR	phantom ecru	+$0
LBS	phantom cocoa	+$0
LBU	medium matte walnut	+$0
LBV	warm grey teak	+$0
LU	soft white	+$0
WL	sandstone	+$0
WN	warm grey neutral	+$0

Step 11. Edge Finish		
For thermally-fused laminate (L)		
76	light brown walnut	+$0
8Q	folkstone grey	+$0
91	white	+$0
98	studio white	+$0
BU	black umber	+$0
CL	cool grey neutral	+$0
HF	inner tone light	+$0
HM	natural maple	+$0
HP	light anigre	+$0
HX	aged cherry	+$0
LBA	clear on ash	+$0
LBR	phantom ecru	+$0
LBS	phantom cocoa	+$0
LBU	medium matte walnut	+$0
LBV	warm grey teak	+$0
LBB	oak on ash	+$0
LBC	walnut on ash	+$0
LBF	neutral twill	+$0
LBJ	graphite twill	+$0
LBQ	white twill	+$0
LU	soft white	+$0
WL	sandstone	+$0
WN	warm grey neutral	+$0
For thermally-fused laminate/universal edge (U)		
PLY	plywood edge	+$50

Laminate Screen, Surface Attached Y1120.

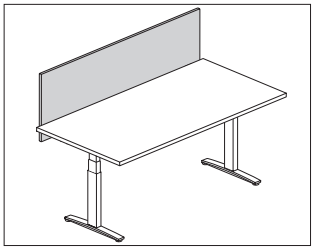

Product Information

Description

This screen attaches to an individual height adjustable work surface. It has a laminate surface with frameless design and comes in privacy and modesty sizes. Attachment hardware included.

Notes

Privacy and modesty panel actual width is 2″ less than specified width.

Privacy screen (13A) top edge aligns with the 42″-high Canvas datum line; bottom edge is 4″ below work surface.

Privacy & modesty screen (13B) top edge aligns with the 42″-high Canvas datum line; bottom edge is 11 1/8″ below work surface.

Screens 54″ wide and wider include an additional 1″-wide center mounting bracket.

Recommended mounting creates a 1″ gap between back edge of surface and the screen to accommodate cable routing and the attachment or clamp-mounting of other hardware to the surface.

Optional cable management trough is only available when specifying privacy & modesty height option (13B). Trough finish is graphite.

Attachment brackets are inset from edge of screen by approximately 8″ and require 2 1/2″ of work surface for attachment.

Attachment bracket finish is painted graphite.

Dimensions

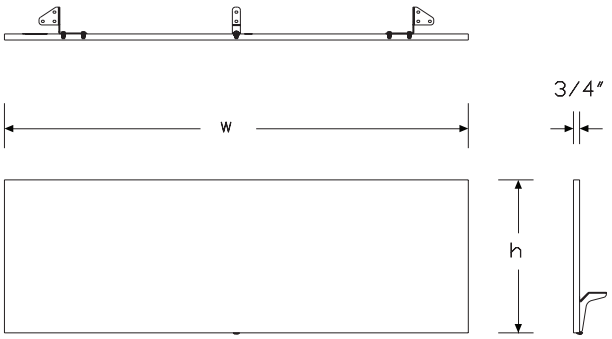

Specification Information

Step 1.

Y1120.

Step 2. Height

13A	privacy (13 1/2″ above worksurface)
13B	privacy & modesty (13 1/2″ above worksurface/11 1/8″ below worksurface)

Step 3. Width

24	24″ wide
30	30″ wide
36	36″ wide
42	42″ wide
48	48″ wide
54	54″ wide
60	60″ wide
66	66″ wide
72	72″ wide

Step 4. Surface Material

L	thermally-fused laminate
U	thermally-fused laminate/universal edge

Prices for Steps 1-4.

			L	U
Y1120.	**13A**	**24**	$256	256
		30	$272	272
		36	$286	286
		42	$300	300
		48	$314	314
		54	$327	327
		60	$337	337
		66	$348	348
		72	$362	362
	13B	**24**	$316	316
		30	$333	333
		36	$350	350
		42	$368	368
		48	$386	386
		54	$400	400
		60	$417	417
		66	$429	429
		72	$443	443

Laminate Screen, Surface Attached *continued*

Step 5. Grain Direction

For 24" wide (24), 30" wide (30), 36" wide (36), 42" wide (42), 48" wide (48), 54" wide (54), or 60" wide (60)

VTG	vertical grain	+$0
HRG	horizontal grain	+$0

For 66" wide (66) or 72" wide (72)

HRG	horizontal grain	+$0

Step 6. Cable Trough

For privacy (13½" above worksurface) (13A)

NC	no cable way	+$0

For privacy & modesty (13½" above worksurface/11⅛" below worksurface) (13B)

NC	no cable way	+$0
CW	cable way	+$25

Step 7. Surface Finish

76	light brown walnut	+$0
8Q	folkstone grey	+$0
91	white	+$0
98	studio white	+$0
CL	cool grey neutral	+$0
HM	natural maple	+$0
HP	light anigre	+$0
HX	aged cherry	+$0
LBA	clear on ash	+$0
LBR	phantom ecru	+$0
LBS	phantom cocoa	+$0
LBU	medium matte walnut	+$0
LBV	warm grey teak	+$0
LBB	oak on ash	+$0
LBC	walnut on ash	+$0
LBF	neutral twill	+$0
LBJ	graphite twill	+$0
LBQ	white twill	+$0
LU	soft white	+$0
WL	sandstone	+$0
WN	warm grey neutral	+$0

Step 8. Edge Finish

For thermally-fused laminate (L)

76	light brown walnut	+$0
8Q	folkstone grey	+$0
91	white	+$0
98	studio white	+$0
BU	black umber	+$0
CL	cool grey neutral	+$0
HF	inner tone light	+$0
HM	natural maple	+$0
HP	light anigre	+$0
HX	aged cherry	+$0
LBA	clear on ash	+$0
LBR	phantom ecru	+$0
LBS	phantom cocoa	+$0
LBU	medium matte walnut	+$0
LBV	warm grey teak	+$0
LBB	oak on ash	+$0
LBC	walnut on ash	+$0
LBF	neutral twill	+$0
LBJ	graphite twill	+$0
LBQ	white twill	+$0
LU	soft white	+$0
WL	sandstone	+$0
WN	warm grey neutral	+$0

For thermally-fused laminate/universal edge (U)

PLY	plywood edge	+$50

Name Tag Clip Y1121.

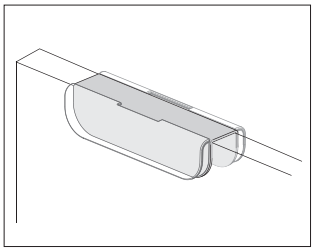

Product Information

Description

This metal name tag clip hangs on surface-attached laminate screens. It can hold 2 or 4 name tags.

Notes

The 2-name-tag clip (2) holds 2 magnetic name tags (YT410.05M) in a back-to-back orientation.

The 4-name-tag clip (4) holds 2 magnetic name tags (YT410.05M) side-by-side on the front side, and 2 side-by-side on the back side.

Name tag clip can hang on any HermanMiller laminate screen.

Order magnetic name tag (YT410.05M) separately.

Order name tag insert for magnetic name tag (O.YT1900) separately through Sales Source.

Dimensions

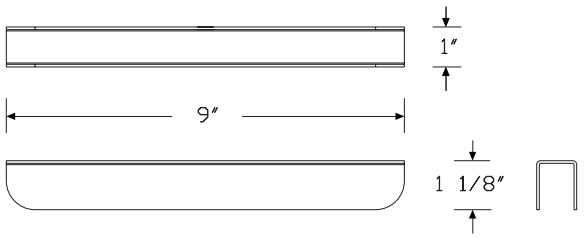

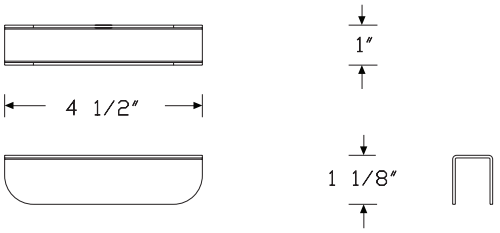

Specification Information

Step 1.

Y1121. A

Step 2. Screen Type

L	thermally-fused laminate A

Step 3. Application

2	2 magnetic name tags A
4	4 magnetic name tags A

Prices for Steps 1-3.

	2	4
Y1121. L	$27	38

Step 4. Screen Finish

91	white A	+$0
G1	graphite A	+$0
MS	metallic silver A	+$0
SNB	satin bronze A	+$10

Metal Board, Screen Attached Y1122.

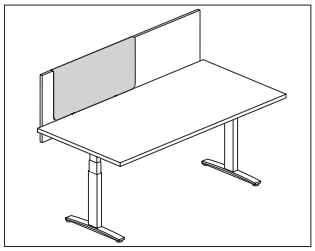

Product Information

Description

This metal board hangs on surface-attached laminate screens. It has a frameless, all-metal design with a straight edge. It accepts magnets and can be dry-erase marker writable when used with the magnetic marker board.

Notes

Metal board can hang on any HermanMiller laminate screen.

Order the following accessories separately:

- Magnetic document clip (YT400.)
- Magnetic name tag (YT410.05M)
- Magnetic marker board (YT450.)

Dimensions

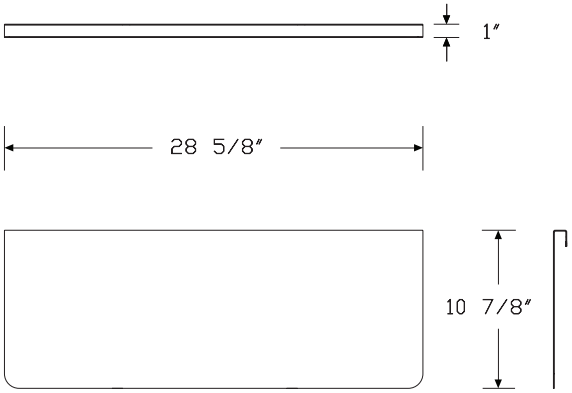

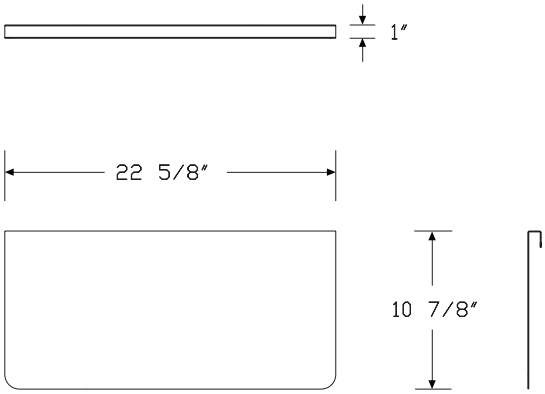

Metal Board, Screen Attached

continued

Specification Information
Step 1.
Y1122. A

Step 2. Screen Type	
L	thermally-fused laminate A

Step 3. Height	
A	11″ high A

Step 4. Width	
24	24″ wide A
30	30″ wide A

Prices for Steps 1-4.			
		24	**30**
Y1122. L	**A**	$135	148

Step 5. Screen Finish		
91	white A	+$0
G1	graphite A	+$0
MS	metallic silver A	+$0
SNB	satin bronze A	+$10

Marker Board Screen, Dock Mounted FD118.

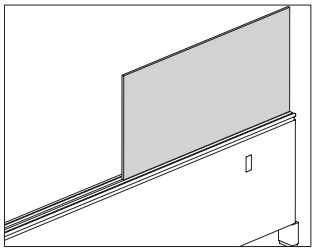

Product Information

Description

This marker board laminate screen attaches anywhere along the top rail of the 22" high Canvas dock to extend the overall height and to provide boundary with a white, dry-erase marker board face. Attachment hardware included.

Dimensions

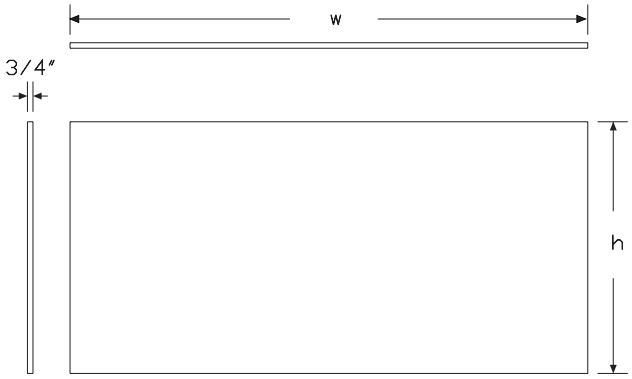

Specification Information

Step 1.

FD118. A

Step 2. Type

M marker board - non magnetic

Step 3. Height

20 20" high
24 24" high
31 31" high
35 35" high

Step 4. Width

24 24" wide
30 30" wide
36 36" wide
42 42" wide
48 48" wide
60 60" wide
72 72" wide

Prices for Steps 1-4.

		24	30	36	42	48	60
FD118. M	**20**	$769	831	897	1026	1152	1280
	24	$831	897	964	1087	1204	1339
	31	$889	979	1108	1204	1317	1416
	35	$1055	1129	1204	1293	1385	1474

		72
FD118. M	**20**	$1406
	24	$1459
	31	$1504
	35	$1581

Index by Product Name

Canvas Office Landscape® Dock

Bracket Hardware, Pari Freestanding Screen/Low Credenza page(s) 130
Bracket Hardware, Screens to Renew Table 129
Bracket Hardware, Work Surface/Low Storage 127
Cable Clips 38
Cable Management Channel 79
Cable Management Trough 78
Cable Manager 77
Cable Manager - Dock to Surface 41
Ceiling Power Entry 20
Closed Support Leg 70
Column Kit, Dock Peninsula Surface 65
Connection Hardware, Screens 125
Controlled Power Module - Bottom of Dock 31
Controlled Receptacle Decal (12 per sheet) 35
Cord Cleat 80
Data Housing 39
Dock Foot 7
Dock Foot, Structural (Support Foot) 6
Dock Power Harness 21
Dock Structure 5
Dock-to-Dock Connector 8
Dock to Screen Bracket, Screens 128
Dock to Surface Tethers 59
Finished End, Architectural, Dock 11
Fixed Surface Support, Low Credenza, Power Chase 74
Flat Edge Screen, Delineation 141
Flat Edge Screen, Dock Mounted 131
Flat Edge Screen, Stanchion Infill 134
Flat Edge Screen, Storage Attached 143
Flat Edge Screen, Surface Attached with Modesty 136
Gallery Panel, Dock Attached 12
Glass Screen, Dock Mounted 101
Glass Screen, Stanchion Infill 103
Grommet Kit, Surface 82
Half Bridge 44
Individual Bridge 42
Laminate Screen, Dock Mounted 147
Laminate Screen, Surface Attached 150, 154
Laminate Screen, Surface Attached with Modesty 152
Logic G1000 Grommet Mounted Electrical Distributor 36
Lower Cladding 17
Low Storage to Dock Bracket 9
Low Storage to Dock Spacer 10
Marker Board, Screen Attached, Acrylic 145
Marker Board Screen, Dock Mounted 159
Markerboard, Storage Cabinet, Frame Top Mounted 86
Metal Board, Screen Attached 157
Metal Marker Board, Fabric Screen Attached 146
Modesty Panel 95
Name Tag Clip 156
Open Support Leg, Architectural Foot 68
Pari Screen, Delineation 119
Pari Screen, Dock Mounted 105
Pari Screen, Freestanding/Surface Attached 123
Pari Screen, Height Adjustable Tables 116
Pari Screen, Stanchion Infill Fabric 110
Pari Screen, Storage Attached 121
Pari Screen, Surface Attached 112
Pari Screen, Surface Attached with Modesty 114
Perpendicular Upper Storage Stanchion Support 91
Power, Block to Block Jumper 22
Power/Data Module Spacer 40
Power Entry, Internal Direct Connect - Floor 18
Power Entry, New York - Floor Power Entry 19
Power Module - Bottom of Dock 23
Power Module - Bottom of Dock - 20 amp 25
Power Module-Top of Dock 29
Privacy Panel 97
Rectangular Surface 51
Screen 93
Secondary Surface 48
Square Open Support Leg 66
Stanchion Infill, Acrylic 100
Stiffener 76
Storage Cabinet, Dock Mounted, Open 83
Storage Cabinet, Dock Mounted, Sliding Door 87
Storage Support, Perpendicular to Dock 92
Support Leg, Post 64
Surface-Attached Screen, Flat Edge 138
Surface Ganging Bracket 60
Surface Support, Low Credenza, Adjustable Height 73
Surface Support, Low Credenza, Fixed Height 72
Tackboard, Storage Cabinet, Frame Top Mounted 85
Team Bridge 46
Under Surface Controlled Power Module 33
Under Surface Power Module 27
Universal Post Leg 61
Universal Post Leg, Shared 63
Upper Storage Stanchion - Center Mount 89
Upper Storage Stanchion - Offset Mount 90
Vertical Cable Manager 81

Index by Product Number

FD2B2.	Universal Post Leg, Shared	page(s) 63
FD16A.	Finished End, Architectural, Dock	11
FD110.	Dock Structure	5
FD113.	Gallery Panel, Dock Attached	12
FD114.	Glass Screen, Dock Mounted	101
FD115.	Pari Screen, Dock Mounted	105
FD116.	Flat Edge Screen, Dock Mounted	131
FD117.	Dock Foot	7
FD118.	Marker Board Screen, Dock Mounted	159
FD119.	Dock Foot, Structural (Support Foot)	6
FD120.	Laminate Screen, Dock Mounted	147
FD126.	Marker Board, Screen Attached, Acrylic	145
FD128.	Dock-to-Dock Connector	8
FD141.	Power Entry, New York - Floor Power Entry	19
FD142.	Ceiling Power Entry	20
FD144.	Power Entry, Internal Direct Connect - Floor	18
FD150.	Power Module - Bottom of Dock	23
FD150M	Controlled Power Module - Bottom of Dock	31
FD151.	Dock Power Harness	21
FD152.	Under Surface Power Module	27
FD152M	Under Surface Controlled Power Module	33
FD154.	Power, Block to Block Jumper	22
FD156.	Power Module - Bottom of Dock - 20 amp	25
FD158.	Power Module-Top of Dock	29
FD159.	Data Housing	39
FD170.	Lower Cladding	17
FD197.	Power/Data Module Spacer	40
FD198.	Cable Clips	38
FD199.	Cable Manager - Dock to Surface	41
FD235.	Column Kit, Dock Peninsula Surface	65
FD290.	Dock to Surface Tethers	59
FD292.	Low Storage to Dock Bracket	9
FD293.	Low Storage to Dock Spacer	10
FD295.	Storage Support, Perpendicular to Dock	92
FD300.	Pari Screen, Freestanding/Surface Attached	123
FD311.	Connection Hardware, Screens	125
FD312.	Bracket Hardware, Work Surface/Low Storage	127
FD313.	Dock to Screen Bracket, Screens	128
FD314.	Bracket Hardware, Screens to Renew Table	129
FD315.	Bracket Hardware, Pari Freestanding Screen/Low Credenza	130
FD415.	Storage Cabinet, Dock Mounted, Open	83
FD416.	Storage Cabinet, Dock Mounted, Sliding Door	87
FD417.	Upper Storage Stanchion - Center Mount	89
FD418.	Perpendicular Upper Storage Stanchion Support	91
FD419.	Upper Storage Stanchion - Offset Mount	90
FD430.	Stanchion Infill, Acrylic	100
FD435.	Pari Screen, Stanchion Infill Fabric	110
FD436.	Glass Screen, Stanchion Infill	103
FD437.	Flat Edge Screen, Stanchion Infill	134
FDE10.	Secondary Surface	48
FDE15.	Half Bridge	44
FDE16.	Team Bridge	46
FDE17.	Individual Bridge	42
FDS10.	Secondary Surface	48
FDS15.	Half Bridge	44
FDS16.	Team Bridge	46
FDS17.	Individual Bridge	42
FT2B2.	Universal Post Leg	61
FT19C.	Cable Management Channel	79
FT29B.	Surface Ganging Bracket	60
FT199.	Cable Management Trough	78
FT298.	Surface Support, Low Credenza, Fixed Height	72
FT299.	Surface Support, Low Credenza, Adjustable Height	73
FT351.	Pari Screen, Surface Attached	112
FT353.	Pari Screen, Surface Attached with Modesty	114
FT354.	Pari Screen, Delineation	119
FT357.	Flat Edge Screen, Surface Attached with Modesty	136
FT358.	Flat Edge Screen, Delineation	141
FT360.	Laminate Screen, Surface Attached	150
FT361.	Laminate Screen, Surface Attached with Modesty	152
FT491.	Tackboard, Storage Cabinet, Frame Top Mounted	85
FT492.	Markerboard, Storage Cabinet, Frame Top Mounted	86
FTE10.	Rectangular Surface	51
FTS10.		
FTT10.		
FV2A2.	Open Support Leg, Architectural Foot	68
FV2D2.	Square Open Support Leg	66
FV2E2.	Closed Support Leg	70
FV298.	Fixed Surface Support, Low Credenza, Power Chase	74
FV360.	Pari Screen, Storage Attached	121
FV361.	Flat Edge Screen, Storage Attached	143
FV689.	Support Leg, Post	64
FV693.	Privacy Panel	97
FV694.	Screen	93
FV695.	Cable Manager	77
FV696.	Stiffener	76
FV697.	Modesty Panel	95
FV698.	Vertical Cable Manager	81
FV982.	Grommet Kit, Surface	82
G1331.	Cord Cleat	80
G9999.	Controlled Receptacle Decal (12 per sheet)	35
Y1116.	Pari Screen, Height Adjustable Tables	116
Y1118.	Surface-Attached Screen, Flat Edge	138

Y1120.	Laminate Screen, Surface Attached	154
Y1121.	Name Tag Clip	156
Y1122.	Metal Board, Screen Attached	157
Y1123.	Metal Marker Board, Fabric Screen Attached	146
Y1425.	Logic G1000 Grommet Mounted Electrical Distributor	36

20-Day or Less/Assigned Lead-Time Order Information

20-Day or Less and Assigned Lead-Time Programs

20-day or less and assigned lead-time products are designed for established Herman Miller dealers with pre-approved credit.

Products are distributed from multiple manufacturing facilities across the United States. All products and options not designated by an Assigned Lead-Time icon A will ship in 20 business days or less after being acknowledged by Herman Miller. Products and options designated by an A are on the assigned lead-time program and will ship in 20 days, less than 20 days, or more than 20 days from order acknowledgement.

Ordering Procedure

Please place orders through Order Manager. If this is not available to you, place orders through mail or fax. Verbal purchase orders will not be accepted.

Order Entry fax number for Meridian®
Filing and Storage: (616) 846 9236.
Order Entry fax number for all other products:
(616) 654 3085.

For more information, contact your Customer Care representative at: (866) 854 3048 ext 3400.

Shipments and Delivery

Per Herman Miller Terms and Conditions.

Changes and Cancellation

Per Herman Miller Terms and Conditions.

Stain-to-Match Program

Program Overview

The Stain-to-Match program gives you the option of using veneer finishes that are not listed in the standard offering. The program allows Herman Miller to match a customer's existing recut or natural veneer, or create a new finish that is unique to an installation.

Specific information on approval, ordering, pricing, and warranty for the Stain-to-Match program is listed below. Questions and requests for assistance may be directed to Herman Miller Options at:

(800) 654 3910

Stain-to-Match Process

1. Fill out the Options Stain-to-Match Request Form and send along with a color sample (2" x 3" minimum) to the Herman Miller Options Applications Team at the address provided on the form. The form can be found on Omni.
2. Within 7-10 working days, Herman Miller Options will send a sample of the color-matched stain on Herman Miller veneer to the requester for the customer's signed approval.
3. If the sample meets the customer's approval, sign the reverse side of the sample, scan and email the approval to:
   options@hermanmiller.com.
4. After the stain has been approved, a formal quotation with special number and pricing can be provided, or the product can be specified through the Vary Easy program, if available. Work with the Options team on final product needs and how to specify.
5. A purchase order can then be placed.

Stain-to-Match Warranty

Herman Miller warrants its products to be free from defects in craftsmanship from the date of delivery for the applicable warranty period. Herman Miller is responsible for the physical properties of the veneers available through the Stain-to-Match program, which include:

STA: Stain-to-Match on Recut Ash
STC: Stain-to-Match on Cherry
STD: Stain-to-Match on Oak
STK: Stain-to-Match on Reltech Anigre (Geiger)
STP: Stain-to-Match on Maple
STU: Stain-to-Match on Walnut (Geiger)

See your specification tool for product specific finish offering limitations.

Customer's Own Material Order Information — Workspaces

Customer's Own Material

Program Overview

The Customer's Own Material (COM) program gives you the option of using textiles other than those listed. Herman Miller will test textiles for application to Herman Miller products and will process orders for those with approved COM textiles only. COM textiles are on assigned lead times.

Omni lists an overview of fabrics that have been tested and indicates whether or not they were approved for application to Herman Miller products.

Specific information on the terms and conditions, testing, approval, and ordering process for COM is listed below. Questions about the COM program and requests for assistance may be directed to your COM representative at:
(616) 654 3400
(866) 854 3048 ext 6543400

Customer's Own Material Warranty

Herman Miller does not warrant COM textiles. COM textiles are tested for application only; they are not tested for performance. The Herman Miller warranty does apply to the underlying products.

Suppliers of COM textiles are responsible for color consistency within commercial tolerances, UV stability, and resistance to soiling and perspiration.

Customer's Own Material Pricing

COM is a Category 1 fabric. There are no application charges for COM fabrics.

Ordering and payment for COM textile yardage are the responsibility of the customer and the textile supplier.

If desired, Herman Miller will purchase COM textiles directly from Maharam, Camira, C.F. Stinson, Guilford of Maine, Luna Textiles, Momentum Textiles and Ultrafabrics to simplify ordering and shipment. For this service, refer to the Supplier Connection program in Omni.

Application Note

Herman Miller does not guarantee that Customer's Own Material (COM) fabric patterns will align across panels/tiles or from one screen to the next. We also do not guarantee that COM fabric designs will be positioned consistently in the same location across several panels, tiles, or screens.

Textile Approval

1. Select a COM textile and a Herman Miller product.
2. If your textile does not show as tested in Omni, submit a request. You will be required to select a specific color of the textile and feature of the product to test, i.e., seat, back, etc.
3. Herman Miller will notify you of approval or disapproval within 4 days from receipt of the test yardage.

Ordering Products with COM

1. Refer to the specific products to determine the yardage required for COM textiles.
   Note: Yardage requirements are based on nondirectional, 54"-wide textiles. 66"-wide textiles are needed for application on 60"-wide products. Additional yardage may be needed due to the unique characteristics of a textile.
2. Obtain the COM ID# in Omni. If the color you are ordering does not have a COM ID# assigned, click "Create ID".
3. Enter your order on Order Manager in Omni.
4. Upon receipt of your purchase order, Herman Miller will send you a PO acknowledgment.
5. Arrangements must be made for the textiles to be shipped from the supplier to Herman Miller for application to the Herman Miller products. Textiles must be tagged with the assigned identification number and the roll yardage quantity. See Omni for shipping procedures and current shipping addresses or contact a COM representative at (616) 654 3400 or (866) 854 3048 ext 6543400.

   Products will be scheduled for production when COM textiles are received at Herman Miller. Standard lead times in effect at that time will apply.

   Note: If textiles are to be purchased directly by Herman Miller through the Supplier Connection program, Herman Miller will handle the ordering and shipping process and will schedule your order for production upon receipt of your purchase order (dependent on textile availability). Refer to the Supplier Connection program for more information.

Supplier Connection

Program Overview

The Supplier Connection program is a service offered by Herman Miller to purchase approved COM textiles directly from Maharam, Camira, C.F. Stinson, Guilford of Maine, Luna Textiles, Momentum Textiles and Ultrafabrics. When you select a textile through this program, Herman Miller will facilitate the ordering, scheduling, and shipment of the textile directly with the supplier.

Suppliers included in the Supplier Connection program keep an active inventory of textiles that are pre-approved for application to Herman Miller products. Pre-approval applies only to the suitability of a textile for manufacturing and application to a Herman Miller product. Omni provides an overview of fabrics that have been tested and indicates whether or not they were approved for application to Herman Miller products.

Specific information on the terms and conditions, testing, approval, and ordering process for the Supplier Connection program is listed below. Questions and requests for assistance may be directed to your COM representative at:
(616) 654 3400
(866) 854 3048 ext 6543400

Supplier Connection Warranty

Textiles purchased by Herman Miller through the Supplier Connection program are COM and are not warranted by Herman Miller. COM textiles are tested for application only; they are not tested for performance. The Herman Miller warranty does apply to the underlying products.

Suppliers of COM textiles are responsible for color consistency within commercial tolerances, UV stability, and resistance to soiling and perspiration.

Supplier Connection Pricing

Textiles purchased by Herman Miller through the Supplier Connection program are COM. COM is a Category 1 fabric. There are no application charges for COM fabrics.

Payment for textiles purchased by Herman Miller through the Supplier Connection program is the responsibility of the customer or dealer. Herman Miller will invoice the order at a total product cost based on the supplier's price published at the time of the order.

Textile Approval

1. Select a COM textile and a Herman Miller product.
2. If your textile does not show as tested in Omni, submit a request. You will be required to select a specific color of the textile and feature of the product to test, i.e., seat, back, etc.
3. Herman Miller will notify you of approval or disapproval within 4 days from receipt of the test yardage.

Ordering Products with Supplier Connection COM

1. Identify and include the following information on your purchase order:
   - Product number and option
   - Herman Miller's COM identification number
2. Enter your order on Order Manager in Omni.
3. Upon receipt of the purchase order, Herman Miller will process your order and send you a PO acknowledgment. Herman Miller will determine the yardage required to produce your product and will order and schedule for delivery the required textile. Standard lead times in effect at the time the textile is allocated at the supplier will apply to products ordered through this program.

Textiles Application Chart — Workspaces

• *Available*

A *Assigned lead-time textile.*

A *Maharam textiles are on assigned lead times.*

See page 2 for exception notes.

		Action Office® Panels/Connectors	Action Office B-Style Tackboards	Action Office/Ethospace E-Style Storage	Ethospace Tiles/Connectors	Ethospace/Canvas Office Landscape® Privacy Doors	Canvas Tiles/Extended Width Tiles/Channel Tiles	Canvas B-/E-Style Storage	Canvas Tackboards	Canvas Metal Desk Hutch Back Panel	Canvas Vista™ Movable Insert and Display Unit	OE1 Boundary Agile Wall Tile	OE1 Boundary Project Board and Screens	OE1 Floating Screen	OE1 Nook Liner/Felt Screen Liner/Storage Trolley Liner	Overlay™ Performance Wall Cladding	Pari™ Screens/Flat Edge Screens/Channel Screens	Passport Work Table Screen	Renew™ Link Screens	Ambit™ Workspace Solutions Screen	Ambit Workspace Solutions Metal Screen Liner	Exclave® Tackable Boards and Stowage Tackable Backdrop	Exclave Video-Friendly Tackable Boards & Stowage Tackable Backdrop	Personal Side Screen	Tu® Wood Storage Cubby Tackboard	Seating
Price Category 1																										
COM	Customer's Own Material A	1	1	1	1	1	1	1	1	1	1	1	1			1	1		1	1		1		1	1	1
2V_ _	Chain	•	•	•	•	•	22	•	•	•	•		•			•	•		•						•	
8T_ _	Crossing (85_ _)	2	2	•	•	•	•	2	•	•		•	•			•	•		•	•		•	8		•	18
3DE_ _	Dex	6	2	•	•	•	•	2	•	•		•	•			•	•		•	•		•		•	•	•
2I_ _	Grasscloth	•	•	•	•	•	•	•	•	•	•		•			•	•		•	•				•	•	
1MN_ _	Monologue	2	2	•	•	•	•	2	•	•	•		•			•	•		•	•				•	•	•
5T_ _	Resonance	•	•	•	•	•	•	•	•	•	•					•								•	•	
4SC_ _	Scatter	2	2				•		•	•	•	•	•			•	•		•	•		•		•	•	•
3DN_ _	Scribe	•	•	•	•	•	•	•	•	•	•	•	•			•	•		•	•		•		•	•	•
22F_ _	Slant	6	•		•	•	•		•	•	•					•									•	
235_ _	Tailored	•		•	•	•	8	•	•	•	•					•									•	•
1WS_ _	Whisper	2	2	•	•	•	•	2	•	•	•	•	•			•	•		•	•		•		•	•	•
Price Category 2																										
3AR_ _	Aristo	2	2	•	•	•	•	2	•	•	•	•	•			•	•		•	•		•		•	•	•
51_ _	Cord	•	•	•	•	•	•	•	•	•	•					•									•	
92_ _	Crepe	2	•	•	•	•	•	•	•	•	•	•				•	•			•		•	8	•		•
3EP_ _	Epic	2	2	•	•	•	•	2	•	•		•	•			•	•		•	•		•		•	•	•
3DP_ _	Hint	•	•	•	•	•	•		•	•	•	•				•	•		•	•		•		•	•	•
4N_ _	Horizon	2	2	•	•	•	•	•	•	•	•					•	•			•				•	•	
1HA_ _	Medley	2	2	•	•	•	•	•	•	•	•	•	•	•		•	•		•	•		•	8	•		•
4ME_ _	Mellow	2	2	•	•	•	•	2	•	•	•	•	•			•	•		•	•		•		•	•	•
ZMA_ _	Metaphor - Maharam A	2	2	2	2	•	•	2	•		•	•				•	•					•				•
8I1_ _	Muse - Maharam A	2	2	2	•		•	2	•		•	•	•			•	•		•	•		•		•		•
3SL_ _	Sequel			2				2																		•
4TE_ _	Terra	2	2	•	•	•	•	2	•	•	•	•	•			•	•		•	•		•		•	•	•
3TW_ _	Twine	•	•	•	21	•	•	•	•	•	•	•	•			•	•		•	•		•		•	•	
8R_ _	Twist (5S_ _)	5	2	•	•	•	•	2	•	•	•		•			•	•		•	•				•	•	18
Price Category 3																										
43Z_ _	Fractal	•	•	•	•	•	•	•	•	•	•	•	•			•	•		•	•		•		•	•	•
47_ _	Ground Cloth®	•	•	•	•	•	•	•	•	•	•	•	•			•	•		•	•		•	8	•	•	
ZM2_ _	Meld - Maharam A *	2	2	•	•	•	•	•	•	•	•	•	•			•	•		•	•		•		•		•
4GE_ _	Parcel	•	•	•	•	•	•	•	•	•	•	•	•			•	•		•	•		•		•	•	•
8W_ _	Strands	•	•	•	•	•	•	•	•	•			•			•	•		•	•				•	•	
Price Category 4																										
3DM_ _	Daydream	2	2	•			•	2	•	•	•	•	•			•	•		•	•		•		•	•	•
1HS_ _	Hush	•	•	•	•	•	•	•	•	•	•	•			•	•		•	•		•	•		•	•	
Price Category 5																										
3CY_ _	Cozy													•												
14A_ _	Hopsak	2	2	•	•		•	2	•	•	•	•				•						•			•	•
40G_ _	Method - Maharam A	2	2	2	2	•	•	2	•	•	•	•	•			•	•		•	•		•		•		•
ZNC_ _	Nico - Maharam A	2	2	2	•	•	•	2	•	•	•	•	•			•	•		•	•		•		•		•
Price Category 6-7																										
No fabrics available at this time.																										

continued on next page

Textiles Application Chart — Workspaces *continued*

• *Available*

A *Assigned lead-time textile.*

A *Maharam textiles are on assigned lead times.*

See page 2 for exception notes.

	Action Office® Panels/Connectors	Action Office B-Style Tackboards	Action Office/Ethospace E-Style Storage	Ethospace Tiles/Connectors	Ethospace/Canvas Office Landscape® Privacy Doors	Canvas Tiles/Extended Width Tiles/Channel Tiles	Canvas B-/E-Style Storage	Canvas Tackboards	Canvas Metal Desk Hutch Back Panel	Canvas Vista™ Movable Insert and Display Unit	OE1 Boundary Agile Wall Tile	OE1 Boundary Project Board and Screens	OE1 Floating Screen	OE1 Nook Liner/Felt Screen Liner/Storage Trolley Liner	Overlay™ Performance Wall Cladding	Pari™ Screens/Flat Edge Screens/Channel Screens	Passport Work Table Screen	Renew™ Link Screens	Ambit™ Workspace Solutions Screen	Ambit Workspace Solutions Metal Screen Liner	Exclave® Tackable Boards and Stowage Tackable Backdrop	Exclave Video-Friendly Tackable Boards & Stowage Tackable Backdrop	Personal Side Screen	Tu® Wood Storge Cubby Tackboard	Seating
Price Category 8																									
1QG_ _Breeze - Maharam A													•												
Price Category 9																									
No fabrics available at this time.																									
Price Category A																									
No fabrics available at this time.																									
Price Category B																									
VM_ _ Medium - Maharam A		2				•	20	•	•	•					•										•
TI_ _ Messenger - Maharam A *		2	•	12	•	•	2	•	•	•					•	•			•						•
Price Category C																									
Z27_ _Manner - Maharam A	2	2	2	•		•	2	•	•	•					•	•			•						•
Z3_ _ Metric - Maharam A	2	2			•	•		•	•	•					•	•			•						•
Price Category D																									
ZMD_ _Mode - Maharam A	2																				•				•
ZS3_ _Spiral - Maharam A	•	•	•	•		•	•	•	•	•					•										
Price Category E																									
ZF3_ _ Flock - Maharam A												•			•				•						
TT_ _ Parallel - Maharam A	7	•		•	•	•	16	•	•	•					•										
Price Category F																									
8EX_ _ Emit - Maharam A	2	2	2	•	•	•	2	•	•																
Price Category G-Z																									
No fabrics available at this time.																									

Application Note: Herman Miller cannot guarantee material/pattern alignment in adjacent products. For example, a fabric's pattern may not align from one screen to the next, or from one panel to the next.

** Available in select colors on 20-day lead-time. Refer to "Maharam Colors - Workspaces" for 20-day colors.*

1 *Refer to price book appendices and Omni for COM information.*
2 *Available on all products except 54" and 60" wide.*
3 *Not available on AO partial-glazed panels.*
4 *Not available on Action Office (AO®) acoustical panels.*
5 *(8R_ _), (8T_ _), (85_ _), and (5S_ _) not available on AO acoustical panels and not available on 54"- or 60"-wide products.*
6 *Not available on Action Office (AO®) connectors, cable management, and spacers.*
7 *Not available on AO acoustical panels; not available on AO2 cable management panel face.*
8 *Available in select colors. See the "Proprietary Textile Colors — Workspaces" appendix.*
12 *Not available on Ethospace tackable tiles.*
16 *Not available on Canvas E-style storage.*
18 *Available on seating products in select colors. See the "Proprietary Textile Colors — Seating" appendix.*
20 *Not available on Canvas E-style storage or 60"-wide B-style storage.*
21 *Not available on Ethospace connectors and cable management tiles.*
22 *Not available as railroaded application option for* Chain *(2V00) on Canvas Extended Width Tiles.*

Price Category 1

Customer's Own Material

See Order Information in Appendices. Assigned lead-time textile. A

8Z Pellicle®

Seating
For New Aeron® Chairs
56% elastomeric
44% polyester

23101	Mineral
23102	Carbon
23103	Graphite

AireWeave™ 2

Seating
For Mirra® 2 Chairs
67% elastomeric
33% antimony-free polyester

1A701	Alpine
1A702	Slate Grey
1A703	Graphite
1A704	Lime Green
1A705	Cappuccino
1A706	Urban Orange
1A707	Dark Turquoise
1A708	Twilight

Chain

Workspaces
66" wide
100% recycled polyester
with 12% ocean bound plastic

2V01	Pearl
2V02	Oyster
2V03	Wheat
2V04	Linen
2V05	Wicker
2V06	Bamboo
2V07	Sage
2V08	Spring Wood
2V09	Iceberg

Crossing

Seating/Workspaces
54" wide
86% antimony-free polyester
14% polyester

8T03	Wicker *
8T04	Porcelain *
8T05	Warm Grey *
8T10	Tomato
8T17	Cerulean
8T18	Indigo
8T19	Shale *
8T22	Tin *
8T23	Graphite
8T24	Black

Crossing

Workspaces
For workspaces products only.
54" wide
86% antimony-free polyester
14% polyester

8501	Ivory *
8502	Oyster *

* Colors available on Exclave® Video-friendly Tackable Boards and Stowage Tackable Backdrop

Dex

Ancillary/Seating/Workspaces
54" wide
67% recycled polyester
33% polyester

3DE01	Frost
3DE02	Silver Pine
3DE03	Stone
3DE04	Shale
3DE05	Charcoal
3DE06	Gossamer
3DE07	Pine

Duo

Seating
For Lino™ Chairs
52% polyester
48% elastomeric

4RM01	Mineral
4RM02	Poppy
4RM03	Green Leaf
4RM04	Jade
4RM05	Shadow
4RM06	Graphite

Flexnet™

Seating
For Caper® Chairs
69% elastomeric
31% polyester

6V01	Black
6V02	Silver Grey

Grasscloth

Workspaces
66" wide
100% recycled polyester
with 11% ocean bound plastic

2I01	Silver Birch
2I02	Pampas
2I03	Sedge
2I07	Lea
2I08	Taro
2I09	Steam Grey
2I13	Gravel

Intercept

Seating
For Cosm™ Chairs
60% elastomeric
40% polyester

84501	Graphite
84502	Carbon
84503	Mineral
84504	Nightfall
84505	Glacier
84506	Canyon

Interweave 2

Seating
For Verus™ Chairs
65% elastomeric
35% polyester

36501	Iceberg
36502	Poppy
36503	Beachglass
36504	Blue Grotto
36505	Slate
36506	Shale

Lyris 2™

Seating
For Setu® Chairs
74% elastomeric
26% polyester

4W21	Alpine
4W23	Chartreuse
4W25	Berry Blue
4W26	Slate Grey
4W28	Chino
4W31	Graphite

Monologue

Ancillary/Seating/Workspaces
54" wide
56% recycled polyester
44% polyester

1MN01	Linen
1MN02	Alabaster
1MN04	Folkstone
1MN05	Silver Pine
1MN06	Slate
1MN07	Seed
1MN09	Persimmon
1MN11	Meadow
1MN12	Blue Sky
1MN13	Blue Spruce
1MN14	Deep Sea

Price category 1 continued on next page

- Maharam textiles are on assigned lead times A.
- Fabric numbers are listed as Herman Miller fabric number/Maharam fabric number.

Price Category 1
continued

Resonance
Workspaces
66” wide
100% polyester

5T04	Greige
5T05	Porcelain
5T06	Alabaster
5T15	Iris
5T28	Sugar
5T47	Tobacco
5T54	Saltbush
5T57	Seed
5T58	Sepia
5T60	Iceberg
5T65	Red
5T67	Boysenberry
5T68	Pistachio
5T69	Green Apple
5T71	Jade
5T72	Blue Green
5T74	Twilight

Ripple 3D Knit
Seating
Available only on Zeph® Chairs.
knit to size
99% recycled polyester
1% lycra

5H201	Black
5H202	Carbon
5H203	Alpine
5H204	Silt
5H205	Tea Rose
5H206	Cocoa
5H207	Persimmon
5H208	Blaze
5H209	Cayenne
5H210	Falcon
5H211	Mustard Seed
5H212	Patina
5H213	Olive
5H214	Moss
5H215	Aloe
5H216	Glacier
5H217	Ultramarine
5H218	Nightfall
5H219	Bluebell
5H220	Boysenberry
5H221	Nightfall/Bluebell
5H222	Patina/Alpine
5H223	Cayenne/Glacier
5H224	Tea Rose/Olive
5H225	Silt/Blaze

Scatter
Ancillary/Seating/Workspaces
54” wide
100% recycled polyester,
with 26% ocean bound plastic

4SC01	Alpine
4SC02	Fog
4SC03	Shale
4SC04	Persimmon
4SC07	Olive
4SC08	Glacier
4SC09	Blue Sky
4SC10	Lagoon
4SC11	Slate Grey
4SC12	Blue Black

Scribe
Seating/Workspaces
54” wide
100% recycled polyester
with 53% ocean bound plastic

3DN01	Spring Wood
3DN02	Poplar
3DN03	Pewter
3DN04	Deep Sea
3DN05	Fir
3DN06	Nutmeg

Slant
Workspaces
66” wide
51% polyester
49% recycled polyester

22F04	Pesto
22F06	Neptune
22F07	Blueberry
22F10	Pumpkin
22F12	Silver Birch
22F13	Bluestone
22F15	Shale

Splash 3D Knit
Seating
Available only on Zeph® Chairs.
knit to size
98% recycled polyester
2% lycra

5H101	Black
5H102	Carbon
5H103	Alpine
5H104	Silt
5H105	Tea Rose
5H106	Cocoa
5H107	Persimmon
5H108	Blaze
5H109	Cayenne
5H110	Falcon
5H111	Mustard Seed
5H112	Patina
5H113	Olive
5H114	Moss
5H115	Aloe
5H116	Glacier
5H117	Ultramarine
5H118	Nightfall
5H119	Bluebell
5H120	Boysenberry

Stretch Knit
Seating
Assigned lead-time textile. A
Available only on Sayl®
Suspension Back Work Chairs
97% polyester, 3% spandex

3DK01	Fog
3DK02	Slate Grey
3DK03	Java
3DK04	Black
3DK05	Red
3DK06	Green Apple
3DK07	Berry Blue

Price category 1 continued on next page

- Maharam textiles are on assigned lead times A.
- Fabric numbers are listed as Herman Miller fabric number/Maharam fabric number.

Price Category 1
continued

Tailored	
Ancillary/Seating/Workspaces	
54” wide	
56% polyester	
44% recycled polyester	
23501	Studio White * **
23502	Sugar *
23503	Tomato
23506	Chive
23508	Cobalt
23509	Cadet
23510	Fog
23511	Graphite
23512	Black
23513	Coffee

* Colors not available on Plex™ Lounge Furniture.
** Color not available on Canvas Tiles.

Tuck 3D Knit	
Seating	
Available only on Fuld Nesting Chairs.	
knit to size	
56% polyester	
44% recycled polyester	
9NK01	Alpine
9NK02	Carbon
9NK03	Nightfall
9NK04	Olive
9NK05	Cocoa
9NK06	Canyon

Whisper	
Ancillary/Seating/Workspaces	
54” wide	
73% recycled polyester	
27% polyester	
with 11.3% ocean bound plastic	
1WS01	Sand Dollar
1WS02	Pebble
1WS03	Silver Birch
1WS04	Iceberg
1WS05	Silver Pine
1WS06	Carbon
1WS07	Cumin
1WS12	Willow
1WS13	Sea Grass
1WS14	Pool
1WS15	Blueberry
1WS16	Glacier
1WS17	Grey
1WS18	Canyon

Price Category 2

Aristo	
Ancillary/Seating/Workspaces	
54” wide	
88% recycled polyester	
12% polyester	
Acrylic backing	
3AR01	Forest Moss
3AR02	Light Brindle
3AR03	Mink
3AR04	Copper
3AR05	Adobe
3AR06	Cherry
3AR07	Lilac
3AR08	Green Apple
3AR09	Surf
3AR10	Waterfall
3AR11	Cadet
3AR12	Tin
3AR13	Pewter
3AR14	Grey Brindle
3AR15	Grey Black

Cord	
Workspaces	
66” wide	
51% antimony-free polyester	
49% polyester	
5101	Ivory
5102	White Ash
5103	Linen
5104	Bamboo
5105	Sepia
5107	Sesame
5109	Bayou
5111	Spring Wood
5112	Summer White

Crepe	
Ancillary/Seating/Workspaces	
54” wide	
100% recycled polyester, with 43.6% ocean bound plastic	
9201	Licorice
9203	Smoke
9207	Cherry
9223	Cadet
9241	Beachglass
9249	Stone *
9251	Fog *
9252	Slate Grey
9261	Shale
9262	Graphite
9265	Mineral
9266	Persimmon
9267	Juniper
9268	Glacier
9269	Cascade
9270	Navy

* Colors available on Exclave® Video-friendly Tackable Boards and Stowage Tackable Backdrop.

Price category 2 continued on next page

- Maharam textiles are on assigned lead times A.
- Fabric numbers are listed as Herman Miller fabric number/Maharam fabric number.

Price Category 2
continued

Epic
Ancillary/Seating/Workspaces
54” wide
56% recycled polyester
44% polyester
Acrylic backing

3EP01	Alabaster
3EP02	Smoke
3EP03	Falcon
3EP05	Copper
3EP06	Urban Orange
3EP07	Poppy
3EP10	Clover
3EP11	Loden
3EP14	Peacock
3EP15	Cadet
3EP16	Indigo
3EP17	Spring Wood
3EP18	Grey Brindle
3EP19	Seed
3EP20	Carbon Dark

Hint
Ancillary/Seating/Workspaces
54” wide
76% recycled polyester
24% polyester

3DP01	Sediment
3DP02	Gunmetal
3DP03	Silt
3DP04	Porcelain
3DP05	Indigo
3DP06	Fern
3DP07	Adobe
3DP08	Red Sea

Horizon
Workspaces
54” wide
65% antimony-free polyester
35% polyester

4N01	Rye Grass
4N02	Sugar Pine
4N03	Silver Pine
4N04	White Ash
4N05	Spring Wood
4N08	Haystack
4N09	Oat Grass
4N13	Pine Cone
4N15	Elderberry

Marvel
Ancillary/Seating
54” wide
100% pvc-free polyurethane
antimicrobial, antibacterial finish

1MV01	Summer White
1MV02	Sand Dollar
1MV03	Espresso
1MV04	Folkstone Grey
1MV05	Graphite
1MV06	Onyx
1MV07	Polar Blue
1MV08	Blush Grey
1MV12	Red
1MV14	Pine
1MV15	Teal Green
1MV16	Twilight

Medley
Ancillary/Seating/Workspaces
54” wide
100% polyester

1HA01	Stone *
1HA02	Trail
1HA03	Charcoal
1HA04	Cinder
1HA07	Chutney
1HA09	Feather Grey *
1HA11	Loden
1HA13	Bayou *
1HA14	Blue Grotto
1HA15	Blueberry
1HA22	Khaki
1HA23	Pewter
1HA24	Yellow Oxide
1HA25	Vintage Rose
1HA26	Raspberry
1HA27	Acai Berry

* Colors available on Exclave®
Video-friendly Tackable Boards
and Stowage Tackable Backdrop

Mellow
Ancillary/Seating/Workspaces
54” wide
100% recycled polyester,
with 16% ocean bound plastic

4ME01	Mineral
4ME04	Olive
4ME05	Glacier
4ME06	Oceanside
4ME07	Charcoal

Metaphor – Maharam
Ancillary/Seating/Workspaces
54” wide
100% polyester
Acrylic backing

ZMA01/466553-001	Afterfeather *
ZMA02/466553-002	Moonflower
ZMA03/466553-003	Handcraft
ZMA04/466553-004	Crossroad
ZMA05/466553-005	Chondrite
ZMA06/466553-006	Detective
ZMA07/466553-007	Steamship
ZMA08/466553-008	Electricity
ZMA09/466553-009	Takeoff
ZMA10/466553-010	Parachute
ZMA11/466553-011	Blueshift
ZMA12/466553-012	Dockyard
ZMA13/466553-013	Bathe
ZMA14/466553-014	Icebound
ZMA15/466553-015	Thermosphere
ZMA16/466553-016	Aboard
ZMA17/466553-017	Agateware
ZMA18/466553-018	Homeland
ZMA19/466553-019	Rockfall
ZMA20/466553-020	Undergrowth
ZMA21/466553-021	Gremolata
ZMA22/466553-022	Patina
ZMA23/466553-023	Sylvan
ZMA24/466553-024	Outfield
ZMA25/466553-025	Windbreak
ZMA26/466553-026	Saguaro

Price category 2 continued on next page

- Maharam textiles are on assigned lead times A.
- Fabric numbers are listed as Herman Miller fabric number/Maharam fabric number.

Price Category 2
continued

Metaphor *continued*	
ZMA27/466553-027	Barnwood
ZMA28/466553-028	Cookshop
ZMA29/466553-029	Amandine
ZMA30/466553-030	Bodhran
ZMA31/466553-031	Centerstage
ZMA32/466553-032	Focaccia
ZMA33/466553-033	Bumblebee
ZMA34/466553-034	Microbrew
ZMA35/466553-035	Sauna
ZMA36/466553-036	Gazebo
ZMA37/466553-037	Pirouette
ZMA38/466553-038	Heartbeat
ZMA39/466553-039	Shino
ZMA40/466553-040	Sunrise
ZMA41/466553-041	Florist
ZMA42/466553-042	Beadwork
ZMA43/466553-043	Framboise
ZMA44/466553-044	Wisteria
ZMA45/466553-045	Warrior

* Colors not available on Eames Aluminum Group, Soft Pad, Sofa Compact, Molded Fiberglass/Plastic Chairs, Task Chair, Wire Chairs, Nelson Platform Bench Cushion, Swoop Plywood Lounge Chair.

Muse – Maharam	
Ancillary/Seating/Workspaces	
54” wide	
100% post-consumer recycled polyester	
8I101/466487-001	Crescendo
8I102/466487-002	Resonate
8I103/466487-003	Runway
8I104/466487-004	Ascend
8I105/466487-005	Veil *
8I106/466487-006	Refresh *
8I107/466487-007	Clear *
8I108/466487-008	Fantasy
8I109/466487-009	Miso
8I110/466487-010	Compass
8I111/466487-011	Bergamot *
8I112/466487-012	Grasshopper

Muse *continued*	
8I113/466487-013	Goal
8I114/466487-014	Mistletoe
8I115/466487-015	Seaglass *
8I116/466487-016	Frigid
8I117/466487-017	Riverbend
8I118/466487-018	Noble
8I119/466487-019	Pulsar
8I120/466487-020	Velella
8I121/466487-021	Sailboat
8I122/466487-022	Sparse
8I123/466487-023	Vase
8I124/466487-024	Haven
8I125/466487-025	Mead
8I126/466487-026	Neat
8I127/466487-027	Jovial
8I128/466487-028	Theater
8I129/466487-029	Poinsettia
8I130/466487-030	Celebrate
8I131/466487-031	Spectacle

* Colors not available on Valor Seating.

Rhythm	
Ancillary/Seating	
54” wide	
100% polyester	
3002	Green Apple
3004	Bayou
3005	Berry Blue
3006	Iris
3007	Twilight
3009	Poppy
3010	Molasses
3012	Khaki
3013	Mink
3014	Black *
3015	Charcoal *

* Colors available on Embody® Chair.

Sequel	
Ancillary/Seating/Workspaces	
54” wide	
100% vinyl	
100% polyester knit backing	
Resilience® finish	
3SL01	White
3SL02	Pebble
3SL03	Mushroom
3SL04	Stone
3SL06	Rattan
3SL09	Seal
3SL10	Blue Fog
3SL11	Folkstone
3SL12	Shale
3SL13	Slate Grey
3SL14	Charcoal
3SL15	Carbon Dark
3SL28	Navy *

* Color available on Eames® Tandem Sling Seating.

Terra	
Ancillary/Seating/Workspaces	
54” wide	
100% post-consumer recycled biodegradable polyester *	
4TE01	Spring Wood
4TE02	Zinc
4TE03	Pine Cone
4TE04	Charcoal

* 1% biodegradation in 1,278 days under ASTM D5511 conditions. No evidence of further degradation.

Twine	
Workspaces	
66” wide	
100% recycled polyester	
3TW01	Silver Birch
3TW02	Ivory
3TW03	Alabaster
3TW04	Bamboo
3TW05	Iceberg
3TW06	Charcoal
3TW07	Feather Grey
3TW08	Shale

Twist	
Ancillary/Seating/Workspaces	
54” wide	
80% antimony-free polyester	
13% recycled polyester	
7% polyester	
8R05	Wicker
8R10	Poppy
8R14	Tin
8R15	Shale
8R16	Graphite
8R17	Birch
8R18	Sepia
8R22	Blueberry
8R23	Green Apple
8R26	Gunmetal
8R27	Cinder
8R29	Pekoe
8R33	Forest
8R35	Waterfall
8R36	Midnight Blue
8R37	Carbon Dark

Twist	
Workspaces	
For workspaces products only.	
54” wide	
80% antimony-free polyester	
13% recycled polyester	
7% polyester	
5S03	Oyster

- Maharam textiles are on assigned lead times A.
- Fabric numbers are listed as Herman Miller fabric number/Maharam fabric number.

Price Category 3

Ace

Ancillary/Seating
54” wide
100% polyurethane
Polyester knit backing
Stain resistant finish

3AC01	Summer White
3AC02	White Ash
3AC03	Rye
3AC04	Metal
3AC05	Clay
3AC06	Chestnut
3AC08	Camelback
3AC09	Chipotle
3AC12	Artichoke
3AC13	Sepia Dark
3AC14	Aloe
3AC15	Flint
3AC16	Blue Sky
3AC17	Oceanside
3AC18	Midnight
3AC20	Frost
3AC21	Lead
3AC22	Black

Fractal

Ancillary/Seating/Workspaces
58” wide
84% recycled polyester
16% polyester

43Z01	Granite
43Z02	Golden Olive
43Z03	Verdant
43Z04	Cadet

Ground Cloth®

Workspaces
66” wide
100% polyester

4701	Vapor Grey
4721	Warm White *
4722	Fog *
4723	Straw *
4724	Red Orange *
4726	Green Apple *
4727	Caribbean *
4728	Midnight *
4729	Cappuccino *

* Colors available on Exclave® Video-friendly Tackable Boards and Stowage Tackable Backdrop

Latitude

Seating
Colors for Mirra 2 Chairs
100% polyester

8M10	Alpine
8M17	Black
8M21	Slate Grey
8M23	French Press
8M25	Dark Turquoise
8M26	Twilight

Meld – Maharam

Ancillary/Seating/Workspaces
54” wide
68% post-consumer recycled polyester
32% polyester
PFOA-Free stain resistant

ZM201/466387-201	Vast
ZM202/466387-202	Panda **
ZM203/466387-203	Skyline *
ZM204/466387-204	Knight **
ZM205/466387-205	Quill **
ZM206/466387-206	Pipe
ZM207/466387-207	Grate *
ZM208/466387-208	Gloss

Meld *continued*

ZM209/466387-209	Bulb
ZM210/466387-210	Bride
ZM211/466387-211	Stark
ZM212/466387-212	Seashell
ZM213/466387-213	Antler
ZM214/466387-214	Crater *
ZM215/466387-215	Perennial
ZM216/466387-216	Mulberry
ZM217/466387-217	Fuchsia *
ZM218/466387-218	Amethyst *
ZM219/466387-219	Merlot
ZM220/466387-220	Magma *
ZM221/466387-221	Rooster
ZM222/466387-222	Heat *
ZM223/466387-223	Clementine
ZM224/466387-224	Fox
ZM225/466387-225	Kiss *
ZM226/466387-226	Bare
ZM227/466387-227	Blonde
ZM228/466387-228	Mimosa
ZM229/466387-229	Comet *
ZM230/466387-230	Honeydew
ZM231/466387-231	Wild *
ZM232/466387-232	Vine
ZM233/466387-233	Seed
ZM234/466387-234	Kale *
ZM235/466387-235	Waterfall *
ZM236/466387-236	Nordic *
ZM237/466387-237	Reef *
ZM238/466387-238	Wave
ZM239/466387-239	Isle **
ZM240/466387-240	Creek
ZM241/466387-241	Mariner *
ZM242/466387-242	Globe
ZM243/466387-243	Spa

* Colors available on 20-day lead time.
** Colors available on 10-day lead time.

Parcel

Ancillary/Seating/Workspaces
54” wide
100% recycled polyester

4GE01	Gunmetal
4GE02	Brindle
4GE03	Bayou
4GE04	Pesto
4GE05	Golden Olive
4GE06	Copper Sea

Saille - Geiger Textile

Ancillary
57” wide
69% cotton
31% polyester
PFOA-Free stain resistant finish
Acrylic backing

18001	Coal
18002	Shale
18003	Haze
18004	Stone
18005	White *
18006	Beach
18007	Sand
18008	Blush
18009	Brick
18010	Fog
18011	Celadon
18012	Poolside
18013	Summer Sky
18014	Lake
18015	Midnight Blue

* Color not available on Eames® Soft Pad Group Chairs/Ottomans.

Price category 3 continued on next page

- Maharam textiles are on assigned lead times A.
- Fabric numbers are listed as Herman Miller fabric number/Maharam fabric number.

Price Category 3
continued

Price Category 4

Strands	
Workspaces	
66” wide	
100% recycled polyester	
8W01	Pebble
8W02	Porcelain
8W03	Taupe
8W04	Honey
8W05	Khaki
8W06	Rye
8W07	Wicker
8W08	Tin
8W09	Cool Grey

Cygnus	
Ancillary	
For Eames® Aluminum Group Chairs	
69% elastomeric	
31% polyester	
5401	Black
5402	Zinc
5403	Quartz

Daydream	
Ancillary/Seating/Workspaces	
54” wide	
48% wool	
41% recycled polyester	
9% nylon	
2% polyester	
3DM01	Rye Grass
3DM02	Silver Birch
3DM03	Pewter
3DM04	Graphite
3DM05	Black
3DM06	Lemongrass
3DM07	Permission
3DM08	Juniper
3DM09	Sea Grass
3DM10	Nightfall

Hush	
Workspaces	
66” wide	
80% polyester	
20% viscose	
1HS01	Canyon
1HS02	Pesto
1HS03	Bayou
1HS04	Greystone
1HS05	Charcoal
1HS06	Rye Grass
1HS07	Cool Grey
1HS08	Dark Grey
1HS09	Aqua Green
1HS10	Nightfall

Kalista - Geiger Textile	
Ancillary	
54” wide	
71% post-industrial recycled cotton	
18% post-industrial recycled polyester	
11% polyester	
PFOA-Free stain resistant finish	
1AL01	Cotton
1AL02	Natural
1AL03	Titanium
1AL04	Pewter
1AL05	Starry Night
1AL06	Red Hot
1AL07	Sun Kissed
1AL08	Dune
1AL09	Beach Glass
1AL10	Bluestone
1AL11	Seaside
1AL12	Night Sky

Lariat – Maharam	
Ancillary/Seating	
54” wide	
100% vinyl	
ZLR01/440401-001	001
ZLR02/440401-002	002
ZLR04/440401-004	004
ZLR06/440401-006	006
ZLR07/440401-007	007
ZLR08/440401-008	008
ZLR10/440401-010	010
ZLR11/440401-011	011
ZLR13/440401-013	013
ZLR14/440401-014	014
ZLR15/440401-015	015
ZLR16/440401-016	016
ZLR18/440401-018	018
ZLR20/440401-020	020
ZLR21/440401-021	021
ZLR24/440401-024	024
ZLR25/440401-025	025
ZLR26/440401-026	026

Lariat *continued*	
ZLR28/440401-028	028
ZLR31/440401-031	031
ZLR32/440401-032	032
ZLR33/440401-033	033
ZLR34/440401-034	034
ZLR38/440401-038	038
ZLR39/440401-039	Granite
ZLR40/440401-040	Linen
ZLR41/440401-041	Stella
ZLR42/440401-042	Saddle
ZLR43/440401-043	Holly
ZLR44/440401-044	Maroon
ZLR45/440401-045	Siren
ZLR46/440401-046	Reseda
ZLR47/440401-047	Purslane
ZLR48/440401-048	Spire
ZLR49/440401-049	Papyrus
ZLR50/440401-050	Chickadee
ZLR51/440401-051	Requiem

Sync	
Ancillary/Seating	
55” wide	
100% polyester	
3SY01	Pine Cone
3SY03	Canyon
3SY04	Truffle
3SY06	Everglade
3SY08	Nightfall
3SY09	Dark Mineral
3SY10	Slate Grey
3SY11	Dark Carbon
3SY12	Black

- Maharam textiles are on assigned lead times A.
- Fabric numbers are listed as Herman Miller fabric number/Maharam fabric number.

Price Category 5

Cozy	
Ancillary/Seating	
54” wide	
100% wool	
3CY01	Heathered Warm Grey
3CY02	Heathered Rye Grass
3CY03	Heathered Cool Grey
3CY05	Heathered Black
3CY06	Heathered Persimmon
3CY07	Heathered Loden
3CY09	Heathered Lagoon
3CY10	Heathered Twilight

Hopsak	
Ancillary/Seating/Workspaces	
56” wide	
100% recycled polyester	
14A20	Black
14A22	Raw Umber Dark
14A26	Grey Blue Dark
14A30	Sepia Dark
14A38	Emerald Dark
14A39	Yellow Dark
14A40	Orange
14A41	Sienna
14A42	Olive Green Dark
14A43	Crimson
14A44	Crimson Dark Dark
14A45	Violet Dark
14A46	Pink Dark Dark
14A47	Ultramarine Dark
14A48	Cobalt Blue
14A49	Terra Cotta
14A50	Ochre Dark

Ingenue - Geiger Textile	
Ancillary	
54” wide	
28% wool	
26% viscose	
25% acrylic	
16% polyester	
5% cotton	
PFOA-Free stain resistant finish	
1GH01	Sand
1GH02	Fog
1GH03	Flannel
1GH04	Trench
1GH05	Vermillion
1GH06	Adriatic
1GH07	Umber
1GH08	Charcoal

Method - Maharam	
Ancillary/Seating/Workspaces	
54” wide	
100% recycled polyester	
with 9% ocean-bound plastic	
40G01/466579-001	Inspire
40G02/466579-002	Rhea
40G03/466579-003	Noise
40G04/466579-004	Speedway
40G05/466579-005	Villanelle
40G06/466579-006	Maestro
40G07/466579-007	Destiny
40G08/466579-008	Possess
40G09/466579-009	Waterside
40G10/466579-010	Relax
40G11/466579-011	Delightful
40G12/466579-012	Parrotlet
40G13/466579-013	Verdurous
40G14/466579-014	Bosky
40G15/466579-015	Acreage
40G16/466579-016	Allude
40G17/466579-017	Tweed
40G18/466579-018	Korma
40G19/466579-019	Fossilize
40G20/466579-020	Cattail
40G21/466579-021	Shortcake
40G22/466579-022	Racecar
40G23/466579-023	Courtship
40G24/466579-024	Jam
40G25/466579-025	Sparrow

Nico - Maharam	
Ancillary/Seating/Workspaces	
54” wide	
63% wool	
21% polyester	
16% solution-dyed nylon	
ZNC01/466564-001	Alcazar
ZNC02/466564-002	Ironclad
ZNC03/466564-003	Tune
ZNC04/466564-004	Bridegroom
ZNC05/466564-005	Diode
ZNC06/466564-006	Jest
ZNC07/466564-007	Sanctuary
ZNC08/466564-008	Aquarius
ZNC09/466564-009	Houseboat
ZNC10/466564-010	Olympian
ZNC11/466564-011	Tennis
ZNC12/466564-012	Dressage
ZNC13/466564-013	Zing
ZNC14/466564-014	Bitterroot
ZNC15/466564-015	Gemini
ZNC16/466564-016	Posh
ZNC17/466564-017	Sizzle
ZNC18/466564-018	Cheerful
ZNC19/466564-019	Watermelon
ZNC20/466564-020	Toucan
ZNC21/466564-021	Rosin
ZNC22/466564-022	Jousting
ZNC23/466564-023	Jojoba
ZNC24/466564-024	Dromedary
ZNC25/466564-025	Toasty
ZNC26/466564-026	Casaba
ZNC27/466564-027	Greenhouse
ZNC28/466564-028	Sibyl
ZNC29/466564-029	Spearmint
ZNC30/466564-030	Pothos
ZNC31/466564-031	Calathea
ZNC32/466564-032	Landscape
ZNC33/466564-033	Espalier
ZNC34/466564-034	Gecko
ZNC35/466564-035	Meditation

Price category 5 continued on next page

- Maharam textiles are on assigned lead times A.
- Fabric numbers are listed as Herman Miller fabric number/Maharam fabric number.

Price Category 5
continued

Price Category 6

Price Category 7

Summit	
Ancillary/Seating	
54” wide	
100% silicone	
Polyester knit backing	
3SU02	Oyster
3SU03	Zinc
3SU04	Sparrow
3SU07	Black
3SU09	Beachglass
3SU10	Midnight

Vionette - Geiger Textile	
Ancillary	
55” wide	
100% polyester	
1GJ01	White Sand Mix
1GJ02	Desert Mix
1GJ03	Light Gray Mix
1GJ04	Pewter Mix
1GJ05	Cobalt Mix
1GJ06	Prussian Blue Mix
1GJ07	Chocolate Mix
1GJ08	Champagne
1GJ09	Morning Sky
1GJ10	Aquatic
1GJ11	Sapphire
1GJ12	Midnight Blue
1GJ13	Shadow
1GJ14	Java
1GJ15	Carbon
1GJ16	Black
1GJ17	Claret
1GJ18	Poppy

Balance	
Seating	
For Embody® chairs	
100% polyester	
3512	Carbon
3513	Black

Outdoor Weave	
Ancillary	
For Eames® Aluminum Group	
Outdoor Chairs	
50% elastomeric	
50% polypropylene	
7203	Lead
7205	Graphite

Customer’s Own Leather
See Order Information in Appendices. Assigned lead-time textile. A

Beck – Maharam	
Ancillary/Seating	
55” wide	
78% wool	
22% nylon	
ZB301/466571-001	Overshadow
ZB302/466571-002	Molecule
ZB303/466571-003	Zeitgeist
ZB304/466571-004	Blacksmith
ZB305/466571-005	Cornerstone
ZB306/466571-006	Chainmail
ZB307/466571-007	Buckram
ZB308/466571-008	Callisto
ZB309/466571-009	Interlude
ZB310/466571-010	Letterpress
ZB311/466571-011	Memoir
ZB312/466571-012	Litmus
ZB313/466571-013	Stoic
ZB314/466571-014	Inkpad
ZB315/466571-015	Praxis
ZB316/466571-016	Astute
ZB317/466571-017	Percolate
ZB318/466571-018	Halocline
ZB319/466571-019	Semblance
ZB320/466571-020	Loch
ZB321/466571-021	Lido
ZB322/466571-022	Underwater
ZB323/466571-023	Tetrapod
ZB324/466571-024	Nymph
ZB325/466571-025	Appalachian

Beck *continued*		
ZB326/466571-026	Menthol	
ZB327/466571-027	Woodruff	
ZB328/466571-028	Malachite	
ZB329/466571-029	Botanist	
ZB330/466571-030	Woodlet	
ZB331/466571-031	Katydid	
ZB332/466571-032	Exuberant	
ZB333/466571-033	Retrospect	
ZB334/466571-034	Lambic	
ZB335/466571-035	Argil	
ZB336/466571-036	Brushstroke	
ZB337/466571-037	Candescent	
ZB338/466571-038	Reedbuck	
ZB339/466571-039	Clayware	
ZB340/466571-040	Curio	
ZB341/466571-041	Whimsy	
ZB342/466571-042	Effervescent	
ZB343/466571-043	Lingonberry	
ZB344/466571-044	Resplendent	
ZB345/466571-045	Hollyhock	
ZB346/466571-046	Filigree	
ZB347/466571-047	Plutonic	
ZB348/466571-048	Foundry	
ZB349/466571-049	Patisserie	
ZB390	Gold	007/032/033 *
ZB391	Russet	036/040/039 *
ZB392	Indigo	008/013/014 *
ZB393	Forest	006/031/028 *

* Colors available only on Girard Color Wheel Ottoman.

Price category 7 continued on next page

- Maharam textiles are on assigned lead times A.
- Fabric numbers are listed as Herman Miller fabric number/Maharam fabric number.

Price Category 7
continued

Bellano - Geiger Textile

Ancillary
55” wide
75% wool
10% linen
8% nylon
7% alpaca

1AX01	Pearl
1AX02	Fog
1AX03	Fawn
1AX04	Pumice
1AX05	Pewter
1AX06	Atlantic
1AX07	Black Green
1AX08	Adriatic
1AX09	Coffee
1AX10	Charcoal
1AX11	Umber
1AX12	Magenta
1AX13	Bittersweet
1AX14	Sunflower

Capri - Geiger Textile

Ancillary
55” wide
36% cotton
32% acrylic
24% rayon
8% polyester
PFOA-Free stain resistant finish
Acrylic backing

17201	Snow
17202	Stone
17203	Trench
17204	Graphite
17205	Anthracite
17206	Light Silver
17207	Russet
17208	Chestnut Brown
17209	Sand
17210	Sterling
17211	Cobalt
17212	Ink

Milaner - Geiger Textile

Ancillary
55” wide
56% wool, 10% acrylic
10% alpaca, 10% cotton
8% nylon, 6% rayon

17101	Linen
17102	Flax
17103	Bark
17104	Deep Navy
17105	Charcoal
17106	Medium Grey
17107	Ash
17108	Crimson

Panno di Dolce - Geiger Textile

Ancillary
55” wide
65% wool
20% nylon
15% alpaca

1AV01	Fog
1AV02	Dune
1AV03	Trench
1AV04	Flannel
1AV05	Charcoal
1AV06	Umber
1AV07	Deep Navy
1AV08	Graphite
1AV09	Orange
1AV10	Pink
1AV11	Deep Red
1AV12	Bright Green
1AV13	Cerulean Blue
1AV14	Deep Cerulean Blue

Pristina - Geiger Textile

Ancillary
55” wide
37% wool
25% viscose
17% acrylic
15% cotton
6% polyester
PFOA-Free stain resistant

1JC01	Dove
1JC02	Goldstone
1JC03	Daybreak
1JC04	Pumice
1JC05	Cappuccino
1JC06	Gunmetal
1JC07	Caspian
1JC08	Café Noir

Resca - Geiger Textile

Ancillary
56” wide
75% wool
10% linen
8% nylon
7% alpaca

1AW01	Fog
1AW02	Dune
1AW03	Trench
1AW04	Flannel
1AW05	Umber
1AW06	Bordeaux

Vesture - Geiger Textile

Ancillary
55” wide
40% wool, 25% polyester
20% silk, 15% nylon
PFOA-Free stain resistant finish

21701	Ashen
21702	Dark Blush
21703	Dusk
21704	Medium Gray
21705	Twilight

Wool Epinglé - Geiger Textile

Ancillary
54” wide
100% wool

16201	Swiss Red
16202	Orange
16203	Light Chestnut Brown
16204	Light Burnt Umber
16205	Pale Native Umber
16207	Grey
16208	Natier Blue
16209	Deep Cerulean Blue
16210	Anthracite
16211	Natural Native Umber
16212	Chestnut Brown

Wool Tweed - Geiger Textile

Ancillary
54” wide
80% wool, 20% nylon

16601	Trench
16602	Pewter
16603	Ruby
16604	Blue Gray
16605	Navy
16606	Umber
16607	Charcoal

- Maharam textiles are on assigned lead times A.
- Fabric numbers are listed as Herman Miller fabric number/Maharam fabric number.

Price Category 8

Breeze - Maharam	
Workspaces	
120” wide	
65% FR polyester	
35% post-consumer recycled FR polyester	
1QG06/283817-006	Meteorite
1QG09/283817-009	Serum

Luce - Maharam	
Ancillary/Seating	
59” wide	
75% post-consumer recycled wool	
20% polyester	
5% nylon	
ZLU01/466566-001	Brioche
ZLU02/466566-002	Blanched
ZLU03/466566-003	Relic
ZLU04/466566-004	Sinter
ZLU05/466566-005	Scoria
ZLU06/466566-006	Austere
ZLU07/466566-007	Pigment
ZLU08/466566-008	Alkali
ZLU09/466566-009	Tidal
ZLU10/466566-010	Imbue
ZLU11/466566-011	Reservoir
ZLU12/466566-012	Brine
ZLU13/466566-013	Undertone
ZLU14/466566-014	Prelude
ZLU15/466566-015	Submerge
ZLU16/466566-016	Cypress
ZLU17/466566-017	Awash

Luce *continued*	
ZLU18/466566-018	Adriatic
ZLU19/466566-019	Province
ZLU20/466566-020	Virescent
ZLU21/466566-021	Nettle
ZLU22/466566-022	Agrarian
ZLU23/466566-023	Serpentine
ZLU24/466566-024	Laurel
ZLU25/466566-025	Clarion
ZLU26/466566-026	Gooseberry
ZLU27/466566-027	Swelter
ZLU28/466566-028	Etruscan
ZLU29/466566-029	Coulis
ZLU30/466566-030	Rubescent
ZLU31/466566-031	Akoya
ZLU32/466566-032	Radiant
ZLU33/466566-033	Regent
ZLU34/466566-034	Spectral
ZLU35/466566-035	Thistle

Tempo – Maharam	
Ancillary	
55” wide	
100% polyester	
Polyester backing	
26S01/466589-001	Chert
26S02/466589-002	Grandstand
26S03/466589-003	Restful
26S04/466589-004	Battleship
26S05/466589-005	Lavender
26S06/466589-006	Dockside
26S07/466589-007	Swimming
26S08/466589-008	Ambience
26S09/466589-009	Adornment
26S10/466589-010	Remedy
26S11/466589-011	Fang
26S12/466589-012	Inshore
26S13/466589-013	Camouflage
26S14/466589-014	Mesclun
26S15/466589-015	Farmland
26S16/466589-016	Tadpole
26S17/466589-017	Purr
26S18/466589-018	Snowman
26S19/466589-019	Beehive
26S20/466589-020	Gazelle
26S21/466589-021	Shiitake
26S22/466589-022	Flaxseed
26S23/466589-023	Crawdad
26S24/466589-024	Flowery
26S25/466589-025	Burgundy
26S26/466589-026	Rangoli
26S27/466589-027	Petunia
26S28/466589-028	Campsite

Whim	
Ancillary	
54” wide	
34% viscose	
33% acrylic	
17% wool	
8% polyester	
9DA01	Warm White
9DA02	Rye
9DA03	Mustard Seed
9DA04	Terra Cotta
9DA05	Fir
9DA06	Navy
9DA07	Pewter

- Maharam textiles are on assigned lead times A.
- Fabric numbers are listed as Herman Miller fabric number/Maharam fabric number.

Price Category 9

Alpaca Mohair - Geiger Textile	
Ancillary	
54” wide	
63% alpaca	
21% cotton, 16% polyester	
18510	Dune
18511	Trench
18512	Vicuna
18570	Sepia
18571	Umber
18580	Fog
18581	Flannel
18582	Charcoal

Campana – Maharam	
Ancillary/Seating	
59” wide	
85% wool	
15% nylon	
ZC001/466571-001	Viverine
ZC002/466571-002	Lithograph
ZC003/466571-003	Moonscape
ZC004/466571-004	Brevity
ZC005/466571-005	Linear
ZC006/466571-006	Hinterland
ZC007/466571-007	Mural
ZC008/466571-008	Sloe
ZC009/466571-009	Interstellar
ZC010/466571-010	Mythology
ZC011/466571-011	Scintillate
ZC012/466571-012	Succession
ZC013/466571-013	Visceral
ZC014/466571-014	Hemisphere
ZC015/466571-015	Troposhpere
ZC016/466571-016	Skye
ZC017/466571-017	Seaward
ZC018/466571-018	Nemorous
ZC019/466571-019	Allegory
ZC020/466571-020	Olivine
ZC021/466571-021	Reptilian
ZC022/466571-022	Basil
ZC023/466571-023	Fanleaf
ZC024/466571-024	Beachgrass
ZC025/466571-025	Hayfield

Campana *continued*	
ZC026/466571-026	Freesia
ZC027/466571-027	Rhodium
ZC028/466571-028	Undercoat
ZC029/466571-029	Airbrush
ZC030/466571-030	Shellfish
ZC031/466571-031	Mojave
ZC032/466571-032	Renaissance
ZC033/466571-033	Decoupage
ZC034/466571-034	Outback
ZC035/466571-035	Millipede

Gemma – Maharam	
Ancillary/Seating	
55” wide	
85% wool	
15% nylon	
ZGE01/466568-001	Crinoline
ZGE02/466568-002	Angelic
ZGE03/466568-003	Savory
ZGE04/466568-004	Honeycomb
ZGE05/466568-005	Gilded
ZGE06/466568-006	Paddleboat
ZGE07/466568-007	Stagecoach
ZGE08/466568-008	Waterbuck
ZGE09/466568-009	Earnest
ZGE10/466568-010	Auric
ZGE11/466568-011	Carmine
ZGE12/466568-012	Serape
ZGE13/466568-013	Ferric
ZGE14/466568-014	Canyon
ZGE15/466568-015	Alembic
ZGE16/466568-016	Patio
ZGE17/466568-017	Sorrel
ZGE18/466568-018	Root

Gemma *continued*	
ZGE19/466568-019	Mansion
ZGE20/466568-020	Buff
ZGE21/466568-021	Starch
ZGE22/466568-022	Dawn
ZGE23/466568-023	Countryside
ZGE24/466568-024	Dewy
ZGE25/466568-025	Reliquary
ZGE26/466568-026	Deluge
ZGE27/466568-027	Overlay
ZGE28/466568-028	Electron
ZGE29/466568-029	Sheath
ZGE30/466568-030	Quietude
ZGE31/466568-031	Jargon
ZGE32/466568-032	Powder
ZGE33/466568-033	Tide
ZGE34/466568-034	Outwash
ZGE35/466568-035	Enamored
ZGE36/466568-036	Smitten
ZGE37/466568-037	Revere
ZGE38/466568-038	Mangosteen
ZGE39/466568-039	Allium
ZGE40/466568-040	Immense
ZGE41/466568-041	Chamber
ZGE42/466568-042	Cosmos
ZGE43/466568-043	Inkling
ZGE44/466568-044	Rainwater
ZGE45/466568-045	Shade
ZGE46/466568-046	Pendant
ZGE47/466568-047	Axial
ZGE48/466568-048	Fervent
ZGE49/466568-049	Legacy
ZGE50/466568-050	Caliber
ZGE51/466568-051	Temple
ZGE52/466568-052	Evenfall

Jasper - Maharam	
Ancillary/Seating	
53” wide	
55% wool	
27% solution-dyed nylon	
18% cotton	
ZJA01/466563-001	Thrill
ZJA02/466563-002	Anise
ZJA03/466563-003	Grapefruit
ZJA04/466563-004	Lifeguard
ZJA05/466563-005	Heartfelt
ZJA06/466563-006	Corsage
ZJA07/466563-007	Earthenware
ZJA08/466563-008	Bear
ZJA09/466563-009	Firelight
ZJA10/466563-010	Dreamcatcher
ZJA11/466563-011	Bobcat
ZJA12/466563-012	Glacial
ZJA13/466563-013	Vaporize
ZJA14/466563-014	Trapdoor
ZJA15/466563-015	Halcyon
ZJA16/466563-016	Observatory
ZJA17/466563-017	Steamboat
ZJA18/466563-018	Aquathlon
ZJA19/466563-019	Cloudless
ZJA20/466563-020	Briny
ZJA21/466563-021	Magical
ZJA22/466563-022	Picnic
ZJA23/466563-023	Herbage
ZJA24/466563-024	Pasture
ZJA25/466563-025	Courtyard
ZJA26/466563-026	Leapfrog

Price category 9 continued on next page

- Maharam textiles are on assigned lead times A.
- Fabric numbers are listed as Herman Miller fabric number/Maharam fabric number.

Price Category 9
continued

Leather	
Ancillary/Seating	
approx. 50 sq. ft. per hide	
100% leather	
2101	Ivory
2109	Black *
2110	Smoke
2111	Graphite
2112	Khaki
2113	Rattan
2114	Truffle
2115	Alpine
2116	Haze
2117	Sable Grey
2118	Dark Mineral **
2119	Dark Carbon ***
2120	Cranberry
2121	Deep Sea

* Armpad color available on Aeron® Chair, Graphite.
** Armpad color available on Aeron Chair, Mineral.
*** Armpad color available on Aeron Chair, Carbon.

Price Category 10

Bristol Leather - Geiger Textile	
Ancillary	
approx. 55 sq. ft. per hide	
100% leather	
5-507	Black
5-511	Putty
5-519	Hunter
5-520	White
5-521	Ivory
5-522	Parchment
5-537	Caribbean
5-546	Pumice
5-547	Smoke
5-548	Charcoal
5-549	Dark Shale
5-556	Downtown Grey
5-557	City Night
5-559	Ash Grey
5-563	Champagne
5-564	Chestnut Brown
5-565	Dark Sienna
5-566	Earthen
5-567	Desert
5-568	British Green
5-579	Paris Blue
5-583	Atlantic
5-592	Camel
5-594	Taupe
5-597	Pure *
5-598	Cream
5-600	Midnight Blue
5-603	Sangria
5-604	Swiss Red
5-605	Nordic Yellow
5-606	Sky Grey
5-608	Natural

* Color not available on Saiba Chair.

Firma – Maharam	
Ancillary/Seating	
55” wide	
78% wool	
22% nylon	
3KH01/466582-001	Wrath
3KH02/466582-002	Pantomime
3KH03/466582-003	Shaded
3KH04/466582-004	Prologue
3KH05/466582-005	Framework
3KH06/466582-006	Railroad
3KH07/466582-007	Grommet
3KH08/466582-008	Lunisolar
3KH09/466582-009	Snowpack
3KH10/466582-010	Coldsnap
3KH11/466582-011	Sealift
3KH12/466582-012	Brood
3KH13/466582-013	Intertidal
3KH14/466582-014	Confide
3KH15/466582-015	Secluded
3KH16/466582-016	Leisure
3KH17/466582-017	Portfolio
3KH18/466582-018	Strato
3KH19/466582-019	Fogbow
3KH20/466582-020	Snowcone
3KH21/466582-021	Kazoo
3KH22/466582-022	Esteem
3KH23/466582-023	Mackerel
3KH24/466582-024	Brooch
3KH25/466582-025	Caesious
3KH26/466582-026	Islet
3KH27/466582-027	Biosphere
3KH28/466582-028	Hilltop
3KH29/466582-029	Arboreal
3KH30/466582-030	Lineage
3KH31/466582-031	Comfrey
3KH32/466582-032	Circe
3KH33/466582-033	Ecosystem
3KH34/466582-034	Knack
3KH35/466582-035	Watt
3KH36/466582-036	Epiphany
3KH37/466582-037	Gamma
3KH38/466582-038	Taxicab
3KH39/466582-039	Varietal
3KH40/466582-040	Tale

Firma *continued*	
3KH41/466582-041	Elemental
3KH42/466582-042	Cuff
3KH43/466582-043	Emu
3KH44/466582-044	Tempeh
3KH45/466582-045	Tephra
3KH46/466582-046	Shellac
3KH47/466582-047	Emporium
3KH48/466582-048	Keratin
3KH49/466582-049	Camwood
3KH50/466582-050	Gloam
3KH51/466582-051	Novela
3KH52/466582-052	Fruitpunch
3KH53/466582-053	Decant
3KH54/466582-054	Milkshake
3KH55/466582-055	Metaphysic
3KH56/466582-056	Carafe
3KH57/466582-057	Voyager
3KH58/466582-058	Tenebrous
3KH59/466582-059	Subtext
3KH60/466582-060	Silent

Gemma Multi – Maharam	
Ancillary/Seating	
55” wide	
85% wool	
15% nylon	
ZGF01/466569-001	Andromeda
ZGF02/466569-002	Dappled
ZGF03/466569-003	Lyra
ZGF04/466569-004	Flaunt
ZGF05/466569-005	Celluloid
ZGF06/466569-006	Hydrozoa
ZGF07/466569-007	Firefly
ZGF08/466569-008	Pisces
ZGF09/466569-009	Strath
ZGF10/466569-010	Erosion
ZGF11/466569-011	Cabaret
ZGF12/466569-012	Candytuft
ZGF13/466569-013	Juice
ZGF14/466569-014	Fairground
ZGF15/466569-015	Copperplate
ZGF16/466569-016	Sunbird
ZGF17/466569-017	Cinematic
ZGF18/466569-018	Clairvoyant

Price category 10 continued on next page

- Maharam textiles are on assigned lead times A.
- Fabric numbers are listed as Herman Miller fabric number/Maharam fabric number.

Price Category 10
continued

Gemma Multi *continued*	
ZGF19/466569-019	Crocus
ZGF20/466569-020	Memoir
ZGF21/466569-021	Roulette
ZGF22/466569-022	Voltaic
ZGF23/466569-023	Compote
ZGF24/466569-024	Lambent
ZGF25/466569-025	Twister
ZGF26/466569-026	Chronicle
ZGF27/466569-027	Sidereal
ZGF28/466569-028	Tanzanite
ZGF29/466569-029	Crystalize
ZGF30/466569-030	Chromium
ZGF31/466569-031	Pallium
ZGF32/466569-032	Spectre
ZGF33/466569-033	Courgette
ZGF34/466569-034	Viper
ZGF35/466569-035	Sunlit
ZGF36/466569-036	Heavenly
ZGF37/466569-037	Vernal
ZGF38/466569-038	Cress
ZGF39/466569-039	Limn
ZGF40/466569-040	Horseradish
ZGF41/466569-041	Shandy
ZGF42/466569-042	Granary
ZGF43/466569-043	Percolate
ZGF44/466569-044	Motor
ZGF45/466569-045	Unicorn
ZGF46/466569-046	Lobster
ZGF47/466569-047	Rhododendron
ZGF48/466569-048	Taffy
ZGF49/466569-049	Rishi
ZGF50/466569-050	Backcountry
ZGF51/466569-051	Buckthorn
ZGF52/466569-052	Coniferous
ZGF53/466569-053	Delphic
ZGF54/466569-054	Hieroglyph
ZGF55/466569-055	Eiderdown
ZGF56/466569-056	Sandbar
ZGF57/466569-057	Tanager

Gemma Multi Reverse – Maharam	
Ancillary/Seating	
55” wide	
85% wool	
15% nylon	
ZGF58/466569-101	Andromeda Reverse
ZGF59/466569-102	Dappled Reverse
ZGF60/466569-103	Lyra Reverse
ZGF61/466569-104	Flaunt Reverse
ZGF62/466569-105	Celluloid Reverse
ZGF63/466569-106	Hydrozoa Reverse
ZGF64/466569-107	Firefly Reverse
ZGF65/466569-108	Pisces Reverse
ZGF66/466569-109	Strath Reverse
ZGF67/466569-110	Erosion Reverse
ZGF68/466569-111	Cabaret Reverse
ZGF69/466569-112	Candytuft Reverse
ZGF70/466569-113	Juice Reverse
ZGF71/466569-114	Fairground Reverse
ZGF72/466569-115	Copperplate Reverse
ZGF73/466569-116	Sunbird Reverse
ZGF74/466569-117	Cinematic Reverse
ZGF75/466569-118	Clairvoyant Reverse
ZGF76/466569-119	Crocus Reverse
ZGF77/466569-120	Memoir Reverse

Gemma Multi Reverse *continued*	
ZGF78/466569-121	Roulette Reverse
ZGF79/466569-122	Voltaic Reverse
ZGF80/466569-123	Compote Reverse
ZGF81/466569-124	Lambent Reverse
ZGF82/466569-125	Twister Reverse
ZGF83/466569-126	Chronicle Reverse
ZGF84/466569-127	Sidereal Reverse
ZGF85/466569-128	Tanzanite Reverse
ZGF86/466569-129	Crystalize Reverse
ZGF87/466569-130	Chromium Reverse
ZGF88/466569-131	Pallium Reverse
ZGF89/466569-132	Spectre Reverse
ZGF90/466569-133	Courgette Reverse
ZGF91/466569-134	Viper Reverse
ZGF92/466569-135	Sunlit Reverse
ZGF93/466569-136	Heavenly Reverse
ZGF94/466569-137	Vernal Reverse
ZGF95/466569-138	Cress Reverse
ZGF96/466569-139	Limn Reverse
ZGF97/466569-140	Horseradish Reverse
ZGF98/466569-141	Shandy Reverse
ZGF99/466569-142	Granary Reverse

Gemma Multi Reverse *continued*	
ZGFA0/466569-143	Percolate Reverse
ZGFA1/466569-144	Motor Reverse
ZGFA2/466569-145	Unicorn Reverse
ZGFA3/466569-146	Lobster Reverse
ZGFA4/466569-147	Rhododendron Reverse
ZGFA5/466569-148	Taffy Reverse
ZGFA6/466569-149	Rishi Reverse
ZGFA7/466569-150	Backcountry Reverse
ZGFA8/466569-151	Buckthorn Reverse
ZGFA9/466569-152	Coniferous Reverse
ZGFB0/466569-153	Delphic Reverse
ZGFB1/466569-154	Hieroglyph Reverse
ZGFB2/466569-155	Eiderdown Reverse
ZGFB3/466569-157	Tanager Reverse

Petra - Maharam	
Ancillary/Seating	
55” wide	
70% wool	
19% linen	
11% nylon	
ZP401/466580-001	Hieroglyph
ZP402/466580-002	Interior
ZP403/466580-003	Samovar
ZP404/466580-004	Calcite
ZP405/466580-005	Silversmith
ZP406/466580-006	Rivet
ZP407/466580-007	Carpolite
ZP408/466580-008	Bonbon

- Maharam textiles are on assigned lead times A.
- Fabric numbers are listed as Herman Miller fabric number/Maharam fabric number.

Price category 10 continued on next page

Price Category 10
continued

Petra *continued*	
ZP409/466580-009	Dreamy
ZP410/466580-010	Bejewel
ZP411/466580-011	Sashimi
ZP412/466580-012	Spirula
ZP413/466580-013	Chalet
ZP414/466580-014	Reindeer
ZP415/466580-015	Nostalgia
ZP416/466580-016	Trove
ZP417/466580-017	Narcissus
ZP418/466580-018	Yurt
ZP419/466580-019	Congee
ZP420/466580-020	Genepy
ZP421/466580-021	Herbaceous
ZP422/466580-022	Paddock
ZP423/466580-023	Precious
ZP424/466580-024	Biome
ZP425/466580-025	Tinted
ZP426/466580-026	Pelagic
ZP427/466580-027	Bluebill
ZP428/466580-028	Chicory
ZP429/466580-029	Eaglet
ZP430/466580-030	Permafrost
ZP431/466580-031	Atlantic
ZP432/466580-032	Airstream
ZP433/466580-033	Debonair

Superweave - Maharam	
Ancillary	
54” wide	
75% polyester	
25% cotton	
Z2203/466241-005	Sienna
Z2204/466241-002	Ochre
Z2207/466241-004	Marine
Z2208/466241-003	Olive
Z2220/466241-001	Orange and Pink

Price Category 11

Prone Leather - Maharam	
Ancillary	
approx. 50 sq. ft. per hide	
100% leather	
protective top coat	
1NX01/700020-001	Lotus
1NX02/700020-002	Timbre
1NX03/700020-003	Essence
1NX04/700020-004	Script
1NX05/700020-005	Gambit
1NX06/700020-006	Obsidian
1NX07/700020-007	Sail
1NX09/700020-009	Vine
1NX10/700020-010	Yarrow
1NX13/700020-013	Balsa
1NX14/700020-014	Shore
1NX15/700020-015	Bricolage
1NX17/700020-017	Ledge
1NX19/700020-019	Mantra
1NX20/700020-020	Java
1NX21/700020-021	Lute
1NX22/700020-022	Glow
1NX23/700020-023	Hickory

Tenera Leather - Geiger Textile	
Ancillary	
approx. 55 sq. ft. per hide	
100% leather	
17501	Cement
17502	Marzipan
17503	Sunglow
17504	Raw Sienna
17505	Maple
17506	Poppy
17507	Salsa
17508	Cranberry
17509	Burnt Sienna
17510	Dark Chocolate
17511	Black
17512	Carbon
17513	Sapphire

Price Category 12-13

No fabrics available at this time.

Price Category 14

Lanalux - Maharam	
Ancillary	
54” wide	
100% wool	
Z1375/466240-005	Black/White
Z1378/466240-006	Olive/Black
Z1380/466240-001	Natural
Z1383/466240-002	Umber
Z1384/466240-007	Natural/Black
Z1386/466240-003	Orange
Z1387/466240-004	Crimson

- Maharam textiles are on assigned lead times A.
- Fabric numbers are listed as Herman Miller fabric number/Maharam fabric number.

Price Category A

No fabrics available at this time.

Price Category B

Medium – Maharam	
Ancillary/Seating/Workspaces	
54” wide	
100% polyester	
VM01/463490-001	Raven
VM02/463490-002	Smoke
VM03/463490-003	Alloy
VM04/463490-004	Flax
VM07/463490-007	Espresso
VM14/463490-014	Laser
VM16/463490-016	Port
VM22/463490-022	Marina
VM29/463490-029	Pistachio
VM32/463490-032	Prospect
VM36/463490-036	Delight
VM39/463490-039	Nautical
VM40/463490-040	Pool
VM44/463490-044	Washed
VM45/463490-045	Sculpture
VM46/463490-046	Thatched
VM47/463490-047	Hike
VM48/463490-048	Tangle
VM49/463490-049	Pacific
VM50/463490-050	Cosmic
VM51/463490-051	Cascade
VM52/463490-052	Blackberry
VM53/463490-053	Nasturtium

Messenger – Maharam	
Ancillary/Seating/Workspaces	
54” wide	
78% post-industrial recycled polyester	
15% polyester, 7% nylon	
TI07/458640-007	Shadow
TI08/458640-008	Bayou *
TI24/458640-024	Poppy
TI25/458640-025	Mao
TI29/458640-029	Onyx *
TI31/458640-031	Cloud *
TI38/458640-038	Depth *
TI40/458640-040	Nile *
TI41/458640-041	Azure *
TI45/458640-045	Cactus *
TI46/458640-046	Ice * **
TI48/458640-048	Neon
TI50/458640-050	Hydrangea
TI53/458640-053	Tangelo
TI54/458640-054	Lumine *
TI58/458640-058	Snow ** ***
TI60/458640-060	Peridot
TI61/458640-061	Capri *
TI62/458640-062	Ultramarine
TI63/458640-063	Squall
TI66/458640-066	Cassis
TI67/458640-067	Aster

Messenger *continued*	
TI69/458640-069	Cherry
TI70/458640-070	Vibrant
TI71/458640-071	Satsuma *
TI72/458640-072	Maize
TI76/458640-076	Fossil
TI77/458640-077	Ash
TI78/458640-078	Tusk
TI79/458640-079	Oyster **
TI81/458640-081	Husk
TI84/458640-084	Robust
TI85/458640-085	Beyond
TI86/458640-086	Voyage *
TI87/458640-087	Everglade
TI89/458640-089	Blanch ***
TI90/458640-090	Longspur
TI91/458640-091	Vireo
TI92/458640-092	Dipper
TI93/458640-093	Gale
TI94/458640-094	Hunter
TI95/458640-095	Lime
TI96/458640-096	Apple
TI97/458640-097	Krill
TI98/458640-098	Catalyst

* Colors available on 20-day lead time.
** Colors not available on Eames Molded Fiberglass and Molded Plastic Side Chairs.
*** Colors not available on Valor Seating.

- Maharam textiles are on assigned lead times A.
- Fabric numbers are listed as Herman Miller fabric number/Maharam fabric number.

Price Category C

Manner - Maharam	
Ancillary/Seating/Workspaces	
54” wide	
65% post-industrial	
recycled polyester	
35% post-consumer	
recycled polyester	
Z2701/466177-001	Magic
Z2702/466177-002	Carob
Z2703/466177-003	Porpoise
Z2704/466177-004	Flint
Z2705/466177-005	Hush *
Z2706/466177-006	Nuance
Z2711/466177-011	Ember
Z2712/466177-012	Wagon
Z2713/466177-013	Ablaze
Z2714/466177-014	Peel
Z2716/466177-016	Butterscotch
Z2717/466177-017	Harvest
Z2720/466177-020	Parakeet
Z2722/466177-022	Aquatic
Z2723/466177-023	Cottage
Z2724/466177-024	Dahlia
Z2725/466177-025	Vivid
Z2726/466177-026	Basin
Z2727/466177-027	Schooner
Z2728/466177-028	Slope
Z2729/466177-029	Silverpoint
Z2730/466177-030	Lattice
Z2731/466177-031	Smoky
Z2732/466177-032	Magnetic
Z2733/466177-033	Woad
Z2734/466177-034	Resolute
Z2735/466177-035	Cruise
Z2736/466177-036	Atmospheric
Z2737/466177-037	Cloudburst
Z2738/466177-038	Tidewater
Z2739/466177-039	Firth
Z2740/466177-040	Oceanside
Z2741/466177-041	Grandeur
Z2742/466177-042	Comfort
Z2743/466177-043	Dill
Z2744/466177-044	Poplar
Z2745/466177-045	Citronella
Z2746/466177-046	Passerine

Manner *continued*	
Z2747/466177-047	Southwest
Z2748/466177-048	Roseate
Z2749/466177-049	Charisma
Z2750/466177-050	Siltstone
Z2751/466177-051	Kimono
Z2752/466177-052	Valiant
Z2753/466177-053	Baroness

* Color not available on Eames Aluminum Group, Executive Chairs, Upholstered Molded Plywood Chairs, and Sofa Compact.

Merit - Maharam	
Ancillary/Seating	
54” wide	
76% post-industrial	
recycled polyester	
24% polyester	
PFOA-Free stain resistant	
88Z01/466444-001	Trickle
88Z02/466444-002	Beluga
88Z03/466444-003	Gunmetal
88Z04/466444-004	Blackout
88Z05/466444-005	Superior
88Z06/466444-006	Ocean
88Z07/466444-007	Highborn
88Z08/466444-008	Immersed
88Z09/466444-009	Rainfall
88Z10/466444-010	Blizzard
88Z11/466444-011	Poolside
88Z12/466444-012	Steel
88Z13/466444-013	Zircon
88Z14/466444-014	Ripple
88Z15/466444-015	Aegean
88Z16/466444-016	Armada
88Z17/466444-017	Hedera
88Z18/466444-018	Rainforest
88Z19/466444-019	Gator
88Z20/466444-020	Vineyard
88Z21/466444-021	Pine
88Z22/466444-022	Kiwi
88Z23/466444-023	Kookaburra

Merit *continued*	
88Z24/466444-024	Bellini
88Z25/466444-025	Sunflower
88Z26/466444-026	Sandstorm
88Z27/466444-027	Mudder
88Z28/466444-028	Lynx
88Z29/466444-029	Farro
88Z30/466444-030	Manila
88Z31/466444-031	Starfish
88Z32/466444-032	Brass
88Z33/466444-033	Arrow
88Z34/466444-034	Gelato
88Z35/466444-035	Nectarine
88Z36/466444-036	Macaron
88Z37/466444-037	Alert
88Z38/466444-038	Goji
88Z39/466444-039	Cabernet
88Z40/466444-040	Eggplant
88Z41/466444-041	Hawk
88Z42/466444-042	Stag
88Z43/466444-043	Overcast

Metric – Maharam	
Ancillary/Seating/Workspaces	
54” wide	
51% post-industrial	
recycled polyester	
49% polyester	
Z302/466014-002	Fog
Z303/466014-003	Fleece
Z312/466014-012	Cardinal
Z313/466014-013	Lava
Z318/466014-018	Pollen
Z320/466014-020	Alligator
Z323/466014-023	Tar
Z324/466014-024	Anchor
Z326/466014-026	Admiral
Z327/466014-027	Seaport
Z328/466014-028	Scuba
Z329/466014-029	Skate
Z330/466014-030	Hopscotch
Z331/466014-031	Film
Z332/466014-032	Whale
Z333/466014-033	Downpour
Z334/466014-034	Midday

Metric *continued*	
Z335/466014-035	Talisman
Z336/466014-036	Hedgerow
Z337/466014-037	Snorkel
Z338/466014-038	Highway
Z339/466014-039	Canary
Z340/466014-040	Sunny
Z341/466014-041	Aztec
Z342/466014-042	Fruit
Z343/466014-043	Galah
Z344/466014-044	Kiln
Z345/466014-045	Moth

Murmur - Maharam	
Ancillary/Seating	
55” wide	
100% polyester	
PFOA-Free stain resistant	
8EY01/466446-001	Gust
8EY02/466446-002	Harmonica
8EY03/466446-003	Canopy
8EY04/466446-004	Dim
8EY05/466446-005	Peppercorn
8EY06/466446-006	Cauldron
8EY07/466446-007	Conquer
8EY08/466446-008	Rapids
8EY09/466446-009	Seawater
8EY10/466446-010	Baby
8EY11/466446-011	Elderberry
8EY12/466446-012	Iceberg
8EY13/466446-013	Tallgrass
8EY14/466446-014	Underground
8EY15/466446-015	Biome
8EY16/466446-016	Cask
8EY17/466446-017	Argan
8EY18/466446-018	Sundown
8EY19/466446-019	Ignite
8EY20/466446-020	Sultry
8EY21/466446-021	Sangria

- Maharam textiles are on assigned lead times A.
- Fabric numbers are listed as Herman Miller fabric number/Maharam fabric number.

Price Category D

Bluff - Maharam	
Ancillary/Seating	
54” wide	
100% polyurethane	
Ink-resistant protective top coat	
Polyester backing	
8I801/466489-001	Loom
8I802/466489-002	Helm
8I803/466489-003	Cruller
8I804/466489-004	Folklore
8I805/466489-005	Beguile
8I806/466489-006	Sherpa
8I807/466489-007	Teleport
8I808/466489-008	Annex
8I809/466489-009	Lorimer
8I810/466489-010	Cinema
8I811/466489-011	Zip
8I812/466489-012	Coach
8I813/466489-013	Supernova
8I814/466489-014	Pirate
8I815/466489-015	Academy
8I816/466489-016	Disco
8I817/466489-017	Equator
8I818/466489-018	Brink
8I819/466489-019	Scene
8I820/466489-020	Petrichor
8I821/466489-021	Exotic
8I822/466489-022	Fauna
8I823/466489-023	Calabash
8I824/466489-024	Fuscous
8I825/466489-025	Wildling
8I826/466489-026	Blitz
8I827/466489-027	Allspice
8I828/466489-028	Lumos
8I829/466489-029	Pilot
8I830/466489-030	Jukebox
8I831/466489-031	Dugout
8I832/466489-032	Claret
8I833/466489-033	Flamenco

Mode – Maharam	
Ancillary/Seating/Workspaces	
54” wide	
80% post-consumer recycled polyester	
20% polyester	
PFOA-Free stain resistant finish	
ZMD01/466337-001	Stroll
ZMD02/466337-002	Intaglio
ZMD03/466337-003	Ominous
ZMD04/466337-004	Machine
ZMD05/466337-005	Talus
ZMD06/466337-006	Marsh
ZMD07/466337-007	Hollow
ZMD08/466337-008	Sycamore
ZMD09/466337-009	Clavicle
ZMD10/466337-010	Billygoat
ZMD11/466337-011	Spindle
ZMD12/466337-012	Lemon
ZMD13/466337-013	Oxeye
ZMD14/466337-014	Henge
ZMD15/466337-015	Goldenrod
ZMD16/466337-016	Cottontail
ZMD17/466337-017	Lioness
ZMD18/466337-018	Oriole
ZMD19/466337-019	Rust
ZMD20/466337-020	Carotene
ZMD21/466337-021	Blush
ZMD22/466337-022	Vermilion
ZMD23/466337-023	Alder
ZMD24/466337-024	Kermes
ZMD25/466337-025	Barberry
ZMD26/466337-026	Petal
ZMD27/466337-027	Valley
ZMD28/466337-028	Odyssey
ZMD29/466337-029	Ballpoint
ZMD30/466337-030	Toile
ZMD31/466337-031	Paradise

Mode *continued*	
ZMD32/466337-032	Angelfish
ZMD33/466337-033	Denim
ZMD34/466337-034	Crush
ZMD35/466337-035	Jetty
ZMD36/466337-036	Saltwater
ZMD37/466337-037	Mallard
ZMD38/466337-038	Celtic
ZMD39/466337-039	Eucalyptus
ZMD40/466337-040	Bonsai
ZMD41/466337-041	Sassafras
ZMD42/466337-042	Yucca
ZMD43/466337-043	Lichen

Spiral - Maharam	
Workspaces	
66” wide	
100% polyester	
ZS301/901882-001	Chalk
ZS303/901882-003	Wheat
ZS304/901882-004	Mica
ZS305/901882-005	Pavement
ZS306/901882-006	Graphite

Price Category E

Article – Maharam	
Ancillary/Seating	
54” wide	
100% vinyl	
ZAT08/458600-008	Marina
ZAT13/458600-013	Flume
ZAT14/458600-014	Storm
ZAT15/458600-015	Toast
ZAT19/458600-019	Fleece
ZAT22/458600-022	Stone
ZAT26/458600-026	Mercury
ZAT29/458600-029	Bluegrass
ZAT31/458600-031	Truffle
ZAT32/458600-032	Gravel
ZAT33/458600-033	Value
ZAT34/458600-034	Tint
ZAT35/458600-035	Snowflake
ZAT36/458600-036	Chalice
ZAT37/458600-037	Trail
ZAT38/458600-038	Pyramid
ZAT39/458600-039	Desert
ZAT40/458600-040	Lei
ZAT41/458600-041	Rouge
ZAT42/458600-042	Karma
ZAT43/458600-043	Opal
ZAT44/458600-044	Periwinkle
ZAT45/458600-045	Vampire
ZAT46/458600-046	Surf
ZAT47/458600-047	Plumage

Price category E continued on next page

- Maharam textiles are on assigned lead times A.
- Fabric numbers are listed as Herman Miller fabric number/Maharam fabric number.

Price Category E
continued

Flock - Maharam	
Workspaces	
63” wide	
100% polyester	
ZF301/901892-001	Calm
ZF302/901892-002	Course
ZF303/901892-003	Highlight
ZF305/901892-005	Poppy
ZF306/901892-006	Briefcase
ZF307/901892-007	Monkstrap
ZF308/901892-008	Quag
ZF309/901892-009	Pistachio
ZF310/901892-010	Froth
ZF311/901892-011	Celadon
ZF312/901892-012	Highsea
ZF313/901892-013	China
ZF314/901892-014	Victorian
ZF315/901892-015	Commander
ZF316/901892-016	Raven
ZF317/901892-017	Aluminum

Micro – Maharam	
Ancillary	
54” wide	
100% vinyl	
ZMB01/466099-001	Muslin
ZMB04/466099-004	Basalt
ZMB06/466099-006	Phantom
ZMB07/466099-007	Depth
ZMB08/466099-008	Cottage
ZMB09/466099-009	Hunter
ZMB11/466099-011	Tomatillo
ZMB12/466099-012	Brew
ZMB14/466099-014	Tang
ZMB15/466099-015	Risk

Parallel — Maharam	
Workspaces	
66” wide	
100% recycled polyester	
TT03/901180-003	Fog
TT22/901180-022	Sterling
TT23/901180-023	Linen
TT24/901180-024	Pea
TT27/901180-027	Boulder
TT28/901180-028	Stream
TT29/901180-029	Shiitake
TT32/901180-032	Brandy
TT33/901180-033	Crater
TT36/901180-036	Quail

Price Category F

Apt – Maharam	
Ancillary/Seating	
54” wide	
100% polyurethane/silicone	
Ink-resistant protective top coat	
Polyester backing	
82T12/466392-012	Iris
82T13/466392-013	Nocturnal
82T14/466392-014	Fluid
82T15/466392-015	Eden
82T16/466392-016	Galactic
82T17/466392-017	Shoreline
82T18/466392-018	Jade
82T19/466392-019	Garden
82T20/466392-020	Botanic
82T21/466392-021	Chartreuse
82T23/466392-023	Lyric
82T24/466392-024	Turmeric
82T25/466392-025	Bengal
82T26/466392-026	Core
82T27/466392-027	Mantle
82T28/466392-028	Sorbet
82T32/466392-032	Oak
82T33/466392-033	Castle
82T34/466392-034	Follow
82T35/466392-035	Elixir
82T36/466392-036	Charm
82T37/466392-037	Descend
82T38/466392-009	Sketch
82T39/466392-010	Glacier
82T40/466392-031	Fortress
82T41/466392-030	Lotus
82T42/466392-001	Coconut
82T43/466392-011	Cobblestone
82T44/466392-029	Bloom
82T45/466392-022	Crepe
82T46/466392-006	Hickory
82T47/466392-007	Constellation
82T48/466392-008	Labyrinth
82T49/466392-002	Vibe
82T50/466392-003	Stampede
82T51/466392-004	Lumber
82T52/466392-005	Gingerbread

Brindle - Maharam	
Ancillary/Seating	
58” wide	
100% polyester	
PFOA-free stain resistant	
Acrylic backing	
87101/466418-001	Calico
87102/466418-002	Mauve
87103/466418-003	Torch
87104/466418-004	Burnt
87105/466418-005	Barn
87106/466418-006	Pharaoh
87107/466418-007	Sandbur
87108/466418-008	Jungle
87109/466418-009	Inland
87110/466418-009	Seagrass
87111/466418-009	Watercolor
87112/466418-009	Aquarium
87113/466418-009	Drill

Chime - Maharam	
Ancillary	
54” wide	
100% vinyl	
V9M3/465350-003	Morel
V9MB/465350-011	Tranquil
V9MJ/465350-020	Slate
V9MV/465350-031	Verve
V9MW/465350-032	Understory

Price category F continued on next page

- Maharam textiles are on assigned lead times A.
- Fabric numbers are listed as Herman Miller fabric number/Maharam fabric number.

Price Category F
continued

Conduit - Maharam
Ancillary/Seating
58” wide
100% polyester
PFOA-free stain resistant
Acrylic backing

87Z01/466428-001	Space
87Z02/466428-002	Syrup
87Z03/466428-003	Nimbus
87Z04/466428-004	Greystone
87Z05/466428-005	Fawn
87Z06/466428-006	Ghost
87Z07/466428-007	Caribbean
87Z08/466428-008	Canal
87Z09/466428-009	Bonfire

Emit – Maharam
Workspaces
54” wide
55% post-industrial recycled polyester
45% post-consumer recycled polyester
PFOA-free stain resistant

8EX01/466378-001	Wed
8EX02/466378-002	Zebra
8EX03/466378-003	Chiffon
8EX05/466378-005	Nectar
8EX06/466378-006	Elk
8EX08/466378-008	Goldenrod
8EX09/466378-009	Beached
8EX10/466378-010	Samba
8EX11/466378-011	Nest
8EX14/466378-014	Groove
8EX17/466378-017	Haiku
8EX18/466378-018	Bluefin
8EX19/466378-019	Flow
8EX20/466378-020	Xenon
8EX21/466378-021	Artem
8EX22/466378-022	Zen
8EX25/466378-025	Limeade

Instill – Maharam
Ancillary/Seating
54” wide
100% polyurethane
Ink-resistant protective top coat
Polyester backing

74M01/466351-001	Page
74M02/466351-002	Limestone
74M03/466351-003	Bobwhite
74M04/466351-004	Loafer
74M07/466351-007	Shaker
74M08/466351-008	Doe
74M09/466351-009	Ride
74M10/466351-010	Squire
74M11/466351-011	Tannin
74M12/466351-012	Vitis
74M14/466351-014	Quail
74M15/466351-015	Brittanic
74M16/466351-016	Narwhal
74M18/466351-018	Stowaway
74M19/466351-019	Koala
74M20/466351-020	Dorsal
74M21/466351-021	Stealth

Keen - Maharam
Ancillary/Seating
54” wide
61% polyester
39% polyolefin
PFOA-Free stain resistant
Acrylic backing

89N01/466433-001	Gaur
89N02/466433-002	Lock
89N03/466433-003	Elk
89N04/466433-004	Oatmeal
89N05/466433-005	Lakefront
89N06/466433-006	Argent
89N07/466433-007	Coyote
89N08/466433-008	Eventide
89N09/466433-009	Canal
89N10/466433-010	Rosemary
89N11/466433-011	Herb
89N12/466433-012	Ruby
89N13/466433-013	Loganberry

Ledger – Maharam
Ancillary/Seating
54” wide
100% polyurethane

V9G1/463770-001	001
V9G2/463770-002	002
V9G3/463770-003	003
V9G4/463770-004	004
V9GG/463770-017	017
V9GQ/463770-025	025
V9GS/463770-026	026
V9GU/463770-028	028
V9GV/463770-029	029
V9GW/463770-030	030
V9GX/463770-031	031
V9GY/463770-032	032
V9G18/463770-042	042
V9G19/463770-043	043
V9G20/463770-044	044
V9G21/463770-045	045
V9G22/463770-046	046

Loop - Maharam
Ancillary/Seating
57” wide
48% post-industrial recycled polyester
26% polyester
26% post-consumer recycled polyester
PFOA-Free stain resistant
Acrylic Backing

ZLL01/466469-001	Opossum
ZLL02/466469-002	Foundation
ZLL03/466469-003	Naval
ZLL04/466469-004	Buoyant
ZLL05/466469-005	Mockingbird
ZLL06/466469-006	Dynasty
ZLL07/466469-007	Zori
ZLL08/466469-008	Wildfire
ZLL09/466469-009	Floral
ZLL10/466469-010	Penguin

Multiply - Maharam
Ancillary/Seating
58” wide
57% post-consumer recycled polyester
43% post-industrial recycled polyester
PFOA-Free stain resistant
Acrylic Backing

82A01/466341-001	Winter
82A02/466341-002	Encore
82A03/466341-003	Swing
82A04/466341-004	Contrast
82A05/466341-005	Sterling
82A06/466341-006	Daze
82A07/466341-007	Sway
82A08/466341-008	Sailor
82A09/466341-009	Mystique
82A10/466341-010	Deep
82A11/466341-011	Craft
82A12/466341-012	Town
82A13/466341-013	Limit
82A14/466341-014	Tamale

Pitch - Maharam
Ancillary
54” wide
100% vinyl

ZPC04/466186-004	Pollen
ZPC07/466186-007	Apple
ZPC11/466186-011	Voyage
ZPC12/466186-012	Turquoise
ZPC14/466186-014	Inlet
ZPC15/466186-015	Captain
ZPC16/466186-016	Aura
ZPC17/466186-017	Coastal
ZPC18/466186-018	Fog
ZPC19/466186-019	Coal
ZPC21/466186-021	Mulberry
ZPC24/466186-024	Flame
ZPC26/466186-026	Tumbleweed
ZPC29/466186-029	Subtle
ZPC30/466186-030	Buff

Price category F continued on next page

- Maharam textiles are on assigned lead times A.
- Fabric numbers are listed as Herman Miller fabric number/Maharam fabric number.

Price Category F
continued

Pepper - Maharam
Ancillary/Seating
58” wide
49% polyester
41% post-industrial recycled polyester
10% post-consumer recycled polyester
PFOA-Free stain resistant
Acrylic Backing

8LW01/466486-001	Dojo
8LW02/466486-002	Marengo
8LW03/466486-003	Harlequin
8LW04/466486-004	Pavlova
8LW06/466486-006	Achiote
8LW07/466486-007	Essence
8LW08/466486-008	Genome
8LW09/466486-009	Myriad
8LW10/466486-010	Terrarium

Scuba - Maharam
Ancillary
54” wide
100% polyurethane

V9B1/464930-001	Vanilla
V9B5/464930-005	Chinchilla
V9B6/464930-006	Mahogany
V9B7/464930-007	Jet
V9B8/464930-008	Charcoal
V9B9/464930-009	Dolphin
V9BA/464930-010	Drizzle
V9BC/464930-012	Conifer
V9BD/464930-013	Bottle
V9BF/464930-015	Tourmaline
V9BG/464930-016	Sapphire
V9BH/464930-017	Electric
V9BL/464930-020	Cabernet
V9BM/464930-021	Brick
V9BN/464930-022	Coral
V9BP/464930-023	Autumn

Strum - Maharam
Ancillary/Seating
54” wide
100% polyurethane with silane-based antimicrobial

Z3301/466122-001	Overcast
Z3302/466122-002	Ridge
Z3304/466122-004	Pigeon
Z3307/466122-007	Bur
Z3308/466122-008	Abalone
Z3312/466122-012	Lemongrass

Price Category G

Compound - Maharam
Ancillary/Seating
54” wide
100% polyurethane with silane-based antimicrobial

ZC201/466196-001	Quartz
ZC203/466196-003	Weathered
ZC204/466196-004	Cliff
ZC205/466196-005	Espresso
ZC206/466196-006	Smolder
ZC207/466196-007	Blaze
ZC208/466196-008	Mandarin
ZC209/466196-009	Maple
ZC210/466196-010	Perennial
ZC211/466196-011	Mountainside
ZC212/466196-012	Tundra
ZC213/466196-013	Manatee
ZC214/466196-014	Marine
ZC215/466196-015	Twilight
ZC216/466196-016	Shelter
ZC217/466196-017	Vessel
ZC218/466196-018	Smoke
ZC219/466196-019	Fog

Fluent Crypton - Maharam
Ancillary
54” wide
52% polyester
31% post-industrial recycled polyester
17% post-consumer recycled polyester

ZFC01/466073-001	Lynx
ZFC12/466073-012	Bayou
ZFC13/466073-013	Bottle
ZFC14/466073-014	Cadet
ZFC22/466073-022	Turf
ZFC24/466073-024	Steady

Fold - Maharam
Seating
54” wide
100% polyurethane
Polyester backing

ZF101/466292-001	Jet
ZF102/466292-002	Chalk
ZF103/466292-003	Smoke
ZF105/466292-005	Fatigue
ZF106/466292-006	Splash
ZF107/466292-007	Apple
ZF108/466292-008	Moss
ZF110/466292-010	Midnight

Gild - Maharam
Ancillary/Seating
54” wide
100% non-phthalate vinyl
Ink-resistant protective top coat
Polyester backing

8AR01/466432-005	Grapevine
8AR02/466432-009	Frosting
8AR03/466432-007	Smokey
8AR04/466432-003	Skylight
8AR05/466432-011	Sandstone
8AR06/466432-004	Hurricane
8AR07/466432-002	Wreath
8AR08/466432-001	Rainforest
8AR09/466432-012	Fudge
8AR10/466432-010	Lantern
8AR11/466432-006	Planet
8AR12/466432-008	Reflection

Price category G continued on next page

- Maharam textiles are on assigned lead times A.
- Fabric numbers are listed as Herman Miller fabric number/Maharam fabric number.

Price Category G
continued

Pare – Maharam	
Ancillary/Seating	
54” wide	
52% wool	
26% polyester	
22% nylon	
PFOA-free stain resistant finish	
ZPR01/466359-001	Polaris
ZPR04/466359-004	Fresco
ZPR06/466359-006	Wink
ZPR07/466359-007	Concord
ZPR08/466359-008	Strawberry
ZPR09/466359-009	Solar
ZPR10/466359-010	Amulet
ZPR11/466359-011	Zest
ZPR12/466359-012	Elmwood
ZPR13/466359-013	Thyme
ZPR17/466359-017	Blueberry

Runner - Maharam	
Ancillary/Seating	
54” wide	
57% post-industrial recycled polyester	
43% post-consumer recycled polyester	
ZRF01/466108-001	Bluff
ZRF03/466108-003	Grove
ZRF04/466108-004	Starboard
ZRF05/466108-005	Plot
ZRF06/466108-006	Carousel

Sudden – Maharam	
Ancillary	
54” wide	
100% polyurethane	
ZSD02/463000-002	002
ZSD03/463000-003	003
ZSD05/463000-005	005
ZSD06/463000-006	006
ZSD07/463000-007	007
ZSD08/463000-008	008
ZSD09/463000-009	009
ZSD10/463000-010	010
ZSD11/463000-011	011
ZSD13/463000-013	013
ZSD15/463000-015	015
ZSD16/463000-016	016
ZSD17/463000-017	017
ZSD18/463000-018	018
ZSD19/463000-019	019
ZSD20/463000-020	020
ZSD24/463000-024	024
ZSD27/463000-027	027
ZSD36/463000-036	036

Price Category H

Anagram - Maharam	
Ancillary	
54” wide	
42% cotton	
32% polyester	
26% nylon	
ZAN01/466067-001	Quarry
ZAN02/466067-002	Hush
ZAN03/466067-003	Electric
ZAN04/466067-004	Range
ZAN05/466067-005	Settle

Circles — Maharam	
Ancillary/Seating	
55” wide	
70% cotton	
30% polyester	
ZT01/458310-001	Khaki
ZT02/458310-002	Fatigue
ZT03/458310-003	Document
ZT04/458310-004	Engine

Dot Pattern — Maharam	
Ancillary/Seating	
55” wide	
71% cotton	
29% polyester	
ZK01/458300-001	Document
ZK02/458300-002	Taupe
ZK04/458300-004	Red
ZK05/458300-005	Navy

Mechanism – Maharam	
Ancillary	
54” wide	
100% polyester	
ZMC01/465952-001	Mercury
ZMC10/465952-010	Pearl
ZMC11/465952-011	Bronze
ZMC13/465952-013	Titanium
ZMC15/465952-015	Tangerine
ZMC17/465952-017	Sprout

Mister – Maharam	
Ancillary	
54” wide	
67% solution-dyed acrylic	
33% solution-dyed polyester	
ZMG01/466178-001	Breeze
ZMG04/466178-004	Enliven
ZMG05/466178-005	Notice
ZMG06/466178-006	Azurite

Regatta – Maharam	
Ancillary	
54” wide	
65% solution-dyed acrylic	
35% solution-dyed polyester	
ZRT01/466189-001	Drift
ZRT02/466189-002	Parasol
ZRT04/466189-004	Swell

Small Dot Pattern — Maharam	
Ancillary/Seating	
55” wide	
71% cotton	
29% polyester	
ZL01/458320-001	Document
ZL02/458320-002	Sand
ZL03/458320-003	Khaki
ZL04/458320-004	Taupe
ZL05/458320-005	Charcoal
ZL06/458320-006	Document Reverse
ZL07/458320-007	Red
ZL08/458320-008	Yellow
ZL09/458320-009	Green

- Maharam textiles are on assigned lead times A.
- Fabric numbers are listed as Herman Miller fabric number/Maharam fabric number.

Price Category I

Colorwheel – Maharam	
Ancillary	
54” wide	
62% cotton	
38% solution-dyed	
post-industrial recycled nylon	
ZCW02/466163-002	Pumice
ZCW03/466163-003	Viridian
ZCW06/466163-006	Charcoal
ZCW07/466163-007	Carbon

Cursive – Maharam	
Ancillary/Seating	
54” wide	
67% solution-dyed acrylic	
33% solution-dyed polyester	
PFOA-Free stain resistant	
7CW01/466335-001	Fast
7CW03/466335-003	Beachcomb
7CW05/466335-005	Swift
7CW07/466335-007	Inkwell
7CW08/466335-008	Rubber

Passage - Maharam	
Ancillary	
54” wide	
100% polyester	
59P01/466614-001	Mirage
59P02/466614-002	Poolside
59P03/466614-003	Cascade
59P04/466614-004	Lacinato
59P05/466614-005	Overstory
59P06/466614-006	Celadon
59P07/466614-007	Echo
59P08/466614-008	Bentonite
59P09/466614-009	Buttercup
59P10/466614-010	Maple
59P11/466614-011	Blossom
59P12/466614-012	Cloudberry
59P13/466614-013	Contessa
59P14/466614-014	Claret
59P15/466614-015	Katana

Study - Maharam	
Ancillary/Seating	
54” wide	
73% solution-dyed acrylic	
27% solution-dyed polyester	
ZSY01/466269-001	001
ZSY02/466269-002	002
ZSY03/466269-003	003
ZSY04/466269-004	004
ZSY05/466269-005	005

Tracery – Maharam	
Ancillary	
52” wide	
34% solution-dyed nylon	
26% wool	
21% polyester	
19% cotton	
acrylic backing	
PFOA-free stain resistant finish	
ZT501/466372-001	Birch
ZT502/466372-002	Sterling
ZT503/466372-003	Flint
ZT504/466372-004	Indigo
ZT505/466372-005	Arctic
ZT506/466372-006	Kelp
ZT507/466372-007	Melon
ZT508/466372-008	Poppy
ZT509/466372-009	Copper
ZT510/466372-010	Papaya
ZT511/466372-011	Sepia

Price Category J

Fluted Silk – Maharam	
Ancillary	
54” wide	
85% silk	
8% cotton	
7% acrylic	
ZFK02/465982-002	Tarnish
ZFK05/465982-005	Calm
ZFK06/465982-006	Flaxen
ZFK10/465982-010	Noticed
ZFK11/465982-011	Moody
ZFK12/465982-012	Constant
ZFK13/465982-013	Seed
ZFK14/465982-014	Eternal
ZFK15/465982-015	Honor
ZFK17/465982-017	Cranach
ZFK20/465982-020	Discreet

Mikado – Maharam	
Ancillary	
54” wide	
79% cotton	
21% polyester	
V1901/459330-001	Umber
V1902/459330-002	Orange
V1903/459330-003	Ultramarine
V1904/459330-004	Pink
V1905/459330-005	Sepia

Trestle - Maharam	
Ancillary	
54” wide	
36% acrylic	
32% wool	
23% cotton	
9% polyester	
3WG01/466613-001	Loam
3WG02/466613-002	Rift
3WG03/466613-003	Fuse
3WG04/466613-004	Cumulus
3WG05/466613-005	Strand
3WG06/466613-006	Pomelo
3WG07/466613-007	Tawny
3WG08/466613-008	Sunstone
3WG09/466613-009	Kindling
3WG10/466613-010	Sidecar
3WG11/466613-011	Beak
3WG12/466613-012	Ficus
3WG13/466613-013	Hinge
3WG14/466613-014	Bluefish
3WG15/466613-015	Oblivion

- Maharam textiles are on assigned lead times A.
- Fabric numbers are listed as Herman Miller fabric number/Maharam fabric number.

Price Category K

Checker – Maharam

Ancillary
55” wide
77% cotton
23% polyester

V1201/459830-001	Emerald Light/ Ivory
V1204/459830-004	Ultramarine/ Emerald
V1206/459830-007	Sienna Dark/ Khaki
V1207/459830-008	Black/White
V1209/459830-009	Ultramarine/ Turquoise
V1210/459830-010	Blue Gray/ Emerald
V1211/459830-011	Olive/Pink
V1212/459830-012	Magenta/ Orange
V1213/459830-013	Crimson/ Orange

Checker Split – Maharam

Ancillary
55” wide
77% cotton
23% polyester

V1301/460290-01	Black/White

Double Triangles – Maharam

Ancillary
55” wide
77% cotton
23% polyester

V1401/459840-001	Black/White

Facets – Maharam

Ancillary
55” wide
77% cotton
23% polyester

V1501/459850-001	Black/White

Isa – Maharam

Ancillary
59” wide
85% wool
15% nylon

VKZ01/466624-001	Bashful
VKZ02/466624-002	Median
VKZ03/466624-003	Observe
VKZ04/466624-004	Plains
VKZ05/466624-005	Drawn
VKZ06/466624-006	Connect
VKZ07/466624-007	Fennel
VKZ08/466624-008	Skyward
VKZ09/466624-009	Oceanic
VKZ10/466624-010	Neptune
VKZ11/466624-011	Sprint
VKZ12/466624-012	Ledge
VKZ13/466624-013	Surround
VKZ14/466624-014	Foretell
VKZ15/466624-015	Lory
VKZ16/466624-016	Dear
VKZ17/466624-017	Foxtrot
VKZ18/466624-018	Sincere
VKZ19/466624-019	Begonia

Optik – Maharam

Ancillary
55” wide
76% cotton
24% polyester

ZQP01/459960-001	Sun Yellow/ Orange
ZQP06/459960-006	White/Black

Unisol – Maharam

Ancillary
55” wide
61% rayon
21% polyester
18% cotton

ZUN01/461160-001	Black/ White

Price Category L

Exaggerated Plaid – Maharam

Ancillary
59” wide
100% wool

ZEP01/466039-001	Glen
ZEP02/466039-002	Brae
ZEP03/466039-003	Firth

Geometri – Maharam

Ancillary
55” wide
77% cotton
23% polyester

ZGM02/459970-002	Red/ Carmine
ZGM03/459970-003	Lilac/Blue
ZGM04/459970-004	White/ Black

Jacobs Coat – Maharam

Ancillary
54” wide
92% wool
8% nylon

V1601/462270-001	Multicolored Bright *
V1602/462270-002	Multicolored Neutral

* Color available on Girard Color Wheel Ottoman.

Millerstripe – Maharam

Ancillary
54” wide
92% wool
8% rayon

V1701/462250-001	Multicolored Bright
V1702/462250-002	Multicolored Neutral

Minicheck - Maharam

Seating
55” wide
78% cotton
22% polyester
PFOA-Free stain resistant finish

ZMK01/466268-001	Black/ White

Monk’s Wool – Maharam

Ancillary
54” wide
96% wool
4% nylon

ZMW01/457301-001	Tusk
ZMW03/457301-003	Slate
ZMW05/457301-005	Cherokee

Pebble Wool – Maharam

Ancillary
54” wide
90% wool
10% nylon

ZPW01/457401-001	Birch
ZPW10/457401-010	Cottage
ZPW13/457401-013	Eggshell
ZPW14/457401-014	Whisper
ZPW15/457401-015	Ceramic
ZPW16/457401-016	Seamist
ZPW17/457401-017	Armory
ZPW18/457401-018	Glaze
ZPW19/457401-019	Cordial

Pebble Wool Multi – Maharam

Ancillary
54” wide
97% wool
3% nylon

ZPM01/461200-001	Fawn
ZPM02/461200-002	Slate
ZPM05/461200-005	Moss
ZPM06/461200-006	Tabasco

Price category L continued on next page

- Maharam textiles are on assigned lead times A.
- Fabric numbers are listed as Herman Miller fabric number/Maharam fabric number.

Price Category L
continued

Quatrefoil – Maharam	
Ancillary	
54” wide	
75% cotton	
25% nylon	
V2101/459350-001	Silver
V2102/459350-002	Pink
V2103/459350-003	Crimson
V2104/459350-004	Emerald
V2105/459350-005	Violet

Repeat Classic Stripe – Maharam	
Ancillary	
55” wide	
47% cotton	
27% rayon	
26% polyester	
ZRS01/462170-001	Inca
ZRS02/462170-002	Pistachio
ZRS03/462170-003	Poppy
ZRS04/462170-004	Cadet
ZRS05/462170-005	Peacock

Repeat Dot Ring – Maharam	
Ancillary	
55” wide	
75% cotton	
25% polyester	
ZRR01/462150-001	Gold
ZRR04/462150-004	Pink
ZRR05/462150-005	Coral
ZRR07/462150-007	Gold Reverse
ZRR10/462150-010	Pink Reverse
ZRR11/462150-011	Coral Reverse

Stripes - Maharam	
Ancillary	
56” wide	
92% wool	
8% nylon	
ZSP01/463980-001	001
ZSP02/463980-002	002
ZSP03/463980-003	003
ZSP04/463980-004	004
ZSP05/463980-005	005
ZSP06/463980-006	006
ZSP07/463980-007	007
ZSP08/463980-008	008
ZSP09/463980-009	009
ZSP10/463980-010	010

Toostripe – Maharam	
Ancillary	
54” wide	
92% wool	
8% nylon	
V2201/462260-001	Orange Dark/ Crimson Dark
V2202/462260-002	Black/ Raw Umber
V2203/462260-003	Ochre Dark/ Sienna

Price Category M

Fruit - Maharam	
Seating	
54” wide	
55% cotton	
32% nylon	
13% post-consumer recycled polyester	
PFOA-Free stain resistant finish	
Acrylic backing	
ZF201/466262-001	Opal
ZF202/466262-002	Lime
ZF203/466262-003	Olive
ZF204/466262-004	Sky
ZF207/466262-007	Russet

Names – Maharam	
Ancillary	
55” wide	
73% cotton	
27% polyester	
V1801/462510-001	Crimson On White
V1802/462510-002	Ultramarine On White
V1803/462510-003	Black On White

Ottoman Stripe – Maharam	
Ancillary	
58” wide	
92% wool	
8% nylon	
ZQN01/466142-001	Brass
ZQN02/466142-002	Cocoa
ZQN03/466142-003	Dusk
ZQN04/466142-004	Pistachio
ZQN05/466142-005	Apricot

Pressed Plaid – Maharam	
Ancillary	
54” wide	
100% wool	
T1101/466181-001	001
T1102/466181-002	002
T1103/466181-003	003
T1104/466181-004	004
T1105/466181-005	005
T1106/466181-006	006

Wool Striae – Maharam	
Ancillary	
54” wide	
100% wool	
T1201/466184-001	001
T1202/466184-002	002
T1203/466184-003	003
T1204/466184-004	004
T1205/466184-005	005
T1206/466184-006	006
T1207/466184-007	007

- Maharam textiles are on assigned lead times A.
- Fabric numbers are listed as Herman Miller fabric number/Maharam fabric number.

Price Category N

Alpaca Epinglé - Maharam

Ancillary
55” wide
100% alpaca

ZAE01/465902-001	Vellum
ZAE02/465902-002	Slate
ZAE06/465902-006	Graphite
ZAE07/465902-007	Beignet

Alpaca Velvet - Maharam

Ancillary
54” wide
100% alpaca

ZAV01/465901-001	Alpine
ZAV06/465901-006	Charcoal
ZAV07/465901-007	Pewter
ZAV08/465901-008	Squash
ZAV09/465901-009	Wallaby
ZAV10/465901-010	Brunia

Bespoke Stripe - Maharam

Ancillary
56” wide
100% wool

ZBP01/463540-001	Navy
ZBP02/463540-002	Tobacco
ZBP03/463540-003	Chocolate
ZBP04/463540-004	Charcoal
ZBP05/463540-005	Black
ZBP06/463540-006	Pewter

Herringbone Stripe - Maharam

Ancillary
57” wide
100% wool

ZKP01/465945-001	Granite
ZKP02/465945-002	Espresso
ZKP03/465945-003	Graphite
ZKP04/465945-004	Indigo
ZKP05/465945-005	Raven

Point – Maharam

Ancillary
53” wide
97% rayon
3% nylon

ZPT01/466090-001	Ivory and Ember
ZPT02/466090-002	Black and Coral
ZPT03/466090-003	Slate and Khaki
ZPT04/466090-004	Black and Cobalt
ZPT05/466090-005	Black and Khaki
ZPT06/466090-006	Slate and Mandarin
ZPT07/466090-007	Slate and Black
ZPT08/466090-008	Brick and Greige
ZPT09/466090-009	Gold and Black
ZPT10/466090-010	Greige and Peat
ZPT11/466090-011	Peat and Mandarin
ZPT12/466090-012	Crimson
ZPT13/466090-013	Mandarin
ZPT14/466090-014	Citrus
ZPT15/466090-015	Grass
ZPT16/466090-016	Cyan
ZPT17/466090-017	Cobalt

Wool Velvet - Maharam

Ancillary
54” wide
100% wool

ZWV01/466120-001	Plush
ZWV02/466120-002	Subdue
ZWV03/466120-003	Flagstone
ZWV04/466120-004	Nori
ZWV06/466120-006	Bridle
ZWV07/466120-007	Covert
ZWV08/466120-008	Gateway

Price Category O

Bavaria Stripe – Maharam

Ancillary
55” wide
77% polyester
23% cotton

ZBS02/466161-002	Unique

Price Category P

Big Stripe – Maharam

Ancillary
55” wide
92% wool
8% nylon

ZBR01/466174-001	Peacock
ZBR02/466174-002	Spring
ZBR03/466174-003	Umber
ZBR04/466174-004	Poppy
ZBR05/466174-005	Cobalt

Epinglé Stripe - Maharam

Ancillary
50” wide
100% cotton

ZES01/466007-001	Caramel
ZES02/466007-002	Lead
ZES03/466007-003	Violet
ZES04/466007-004	Mahogany
ZES05/466007-005	Olive

Layers Garden – Maharam

Ancillary
52” wide
96% wool
3% nylon
1% polyester

ZLY01/465916-001	Ivy/Bronze
ZLY02/465916-002	Putty/ Turquoise
ZLY03/465916-003	Pewter/ White
ZLY04/465916-004	Chocolate/ Lilac
ZLY05/465916-005	Peat/Copper

Price category P continued on next page

- Maharam textiles are on assigned lead times. A
- Fabric numbers are listed as Herman Miller fabric number/Maharam fabric number.

Price Category P
continued

Layers Park – Maharam
Ancillary
52” wide
95% wool
3% nylon
2% polyester

ZLP01/465918-001	Ash/Snow
ZLP02/465918-002	Mineral/Sky
ZLP03/465918-003	Poppy/ Melon
ZLP04/465918-004	Indigo/ White
ZLP05/465918-005	Earth/Cobalt

Layers Vineyard Large – Maharam
Ancillary
52” wide
95% wool
3% nylon
2% polyester

ZLV01/465921-001	Ivory/Onyx
ZLV02/465921-002	Slate/Azure
ZLV03/465921-003	Loden/Sky
ZLV04/465921-004	Taupe/ Crimson
ZLV05/465921-005	Black/ Mahogany

Layers Vineyard Small – Maharam
Ancillary
52” wide
92% wool
5% polyester
3% nylon

ZLS01/465920-001	Ochre/White
ZLS02/465920-002	Scarlet/ Peony
ZLS03/465920-003	Taupe/Violet
ZLS04/465920-004	Jade/ Turquoise
ZLS05/465920-005	Ginger/Rose

Mohair Supreme - Maharam
Ancillary
54” wide
100% mohair

ZMS02/451801-072	Stonehenge
ZMS06/451801-112	Slate *
ZMS07/451801-113	Rich Chocolate *
ZMS09/451801-126	Cayenne
ZMS10/451801-127	Cognac
ZMS12/451801-129	Peat *
ZMS15/451801-133	Abyss
ZMS16/451801-134	Intrigue
ZMS18/451801-136	Lupine *
ZMS28/451801-146	League
ZMS29/451801-147	Armory *
ZMS32/451801-150	Capiz
ZMS33/451801-151	Underneath
ZMS34/451801-152	Crescent
ZMS35/451801-153	National
ZMS36/451801-154	Rooftop
ZMS37/451801-155	Skewer
ZMS38/451801-156	Party
ZMS39/451801-157	Keepsake
ZMS40/451801-158	Travel
ZMS41/451801-159	Estate
ZMS42/451801-160	Grassland
ZMS43/451801-161	Limoncello
ZMS44/451801-162	Mango
ZMS45/451801-163	Doll
ZMS46/451801-164	Carousel
ZMS47/451801-165	Palette
ZMS48/451801-166	Brandy
ZMS49/451801-167	Aristocrat
ZMS50/451801-168	Soulmate
ZMS51/451801-169	Rosette

* Colors available on Eames Lounge Chair and Ottoman.

Price Category Q

A Band Apart – Maharam
Ancillary
56” wide
75% polyester
25% cotton

ZAB01/466000-001	Unique

Brushed Camel – Maharam
Ancillary
58” wide
100% baby camel hair

ZBA01/465977-001	Albino
ZBA02/465977-002	Natural

Deconstructed Rose – Maharam
Ancillary
55” wide
65% polyester
32% cotton
3% rayon

ZDS01/466086-001	Golden
ZDS02/466086-002	Vivid
ZDS03/466086-003	Earthen

Massive Paisley – Maharam
Ancillary
57” wide
76% polyester
24% cotton

ZMV01/465915-001	Ash
ZMV03/465915-003	Cardinal
ZMV06/465915-006	Night

The Firm – Maharam
Ancillary
56” wide
75% polyester
25% cotton

ZTF03/465999-003	Unique

Price Category R

Borders – Maharam
Ancillary
53” wide
98% wool
2% polyester

ZBB01/466082-001	Natural
ZBB02/466082-002	Greige
ZBB03/466082-003	Charcoal
ZBB04/466082-004	Walnut

Stow Leather - Maharam
Ancillary
approx. 50 sq. ft. per hide
100% leather
protective top coat

ZSV01/700014-001	Opera
ZSV02/700014-002	Japonica
ZSV03/700014-003	Masquerade
ZSV04/700014-004	Laguna
ZSV05/700014-005	Jettison
ZSV06/700014-006	Razor
ZSV07/700014-007	Holiday
ZSV08/700014-008	Patchouli
ZSV09/700014-009	Macrame
ZSV10/700014-010	Grace
ZSV11/700014-011	Seraphim
ZSV12/700014-012	Ricotta
ZSV13/700014-013	Neroli
ZSV14/700014-014	Sultana
ZSV15/700014-015	Sundance
ZSV16/700014-016	Quince
ZSV17/700014-017	Babka
ZSV18/700014-018	Maitake
ZSV19/700014-019	Mercer
ZSV20/700014-020	Gaucho
ZSV21/700014-021	Chia
ZSV22/700014-022	Vanguard
ZSV23/700014-023	Zone
ZSV24/700014-024	Zeppelin

Price category R continued on next page

- Maharam textiles are on assigned lead times. A
- Fabric numbers are listed as Herman Miller fabric number/Maharam fabric number.

Price Category R
continued

Stow Leather *continued*
ZSV25/700014-025 Clandestine
ZSV26/700014-026 Raven
ZSV27/700014-027 Cabana
ZSV28/700014-028 Rime
ZSV29/700014-029 Forsythia
ZSV30/700014-030 Panthera
ZSV31/700014-031 Dune
ZSV32/700014-032 Madera
ZSV33/700014-033 Russet
ZSV34/700014-034 Gala
ZSV35/700014-035 Heron

Price Category S

Bavaria – Maharam	
Ancillary	
55” wide	
73% polyester	
27% cotton	
ZBV01/466162-001	Unique

Price Category T

All Grain Leather – Edelman	
Ancillary	
approx. 50 sq. ft. per hide	
100% full-grain Aniline-dye cowhide	
VB01/AG01	Pitch Brown
VB02/AG02	White
VB03/AG03	Cloud
VB04/AG04	Shadow
VB05/AG05	Black
VB06/AG06	Baked Bean
VB07/AG07	Mildew
VB08/AG08	Soot
VB09/AG09	Blue Jeans
VB10/AG10	Merlot
VB11/AG11	Nutmeg
VB12/AG12	Butter
VB13/AG13	Cherry
VB14/AG14	Burnt Orange
VB15/AG15	Whiskey
VB17/AG17	Raw Silk
VB18/AG18	Balsa
VB19/AG19	Naturale
VB21/AG21	Greige
VB22/AG27	Latte
VB23/AG28	Coral
VB24/AG29	Rose
VB25/AG30	Zinnia
VB26/AG31	Iris
VB27/AG32	Daffodil

Hours – Maharam	
Ancillary	
56” wide	
95% wool	
3% nylon	
2% rayon	
ZKR01/466092-001	Day
ZKR02/466092-002	Night

Price Category U

Layers Garden Double – Maharam	
Ancillary	
52” wide	
96% wool	
3% nylon	
1% polyester	
ZLD01/465917-001	Ash/ Quartz/ Grass
ZLD02/465917-002	Earth/ Chocolate/ Coral
ZLD03/465917-003	Black/ Navy/ Cobalt

Layers Park Double – Maharam	
Ancillary	
52” wide	
96% wool	
3% nylon	
1% polyester	
ZLB01/465919-001	Mineral/ Taupe/ Lemon
ZLB02/465919-002	Sienna/ Ginger/ Rose
ZLB03/465919-003	Black/ Peat/ Copper

- Maharam textiles are on assigned lead times. A
- Fabric numbers are listed as Herman Miller fabric number/Maharam fabric number.

Price Category V-W

No fabrics available at this time.

Price Category X

Eden – Maharam
Ancillary
56” wide
83% polyester
17% cotton
ZED01/466258-001 001
ZED02/466258-002 002
ZED03/466258-003 003
ZED04/466258-004 004
ZED05/466258-005 005

Foliage – Maharam
Ancillary
56” wide
75% polyester
25% cotton
ZFG02/466257-002 002
ZFG04/466257-004 004
ZFG05/466257-005 005

Price Category Y

Industry – Maharam
Ancillary
55” wide
80% polyester
20% cotton
ZND01/466255-001 001

Price Category Z

Agency – Maharam
Ancillary
55” wide
75% polyester
25% cotton
ZAG02/466001-002 002
ZAG04/466001-004 004
ZAG05/466001-005 005
ZAG06/466001-006 006
ZAG07/466001-007 007
ZAG08/466001-008 008

- Maharam textiles are on assigned lead times. A
- Fabric numbers are listed as Herman Miller fabric number/Maharam fabric number.

Price Category 10M

Pace Leather – Maharam	
Ancillary	
approx. 50 sq. ft. per hide	
100% leather	
ZPA01/700011-001	Whisper
ZPA02/700011-002	Shy
ZPA03/700011-003	Granite
ZPA04/700011-004	Misty
ZPA05/700011-005	Studio
ZPA06/700011-006	Throne
ZPA07/700011-007	Proper
ZPA08/700011-008	Huron
ZPA09/700011-009	Darkroom
ZPA10/700011-010	Bark
ZPA11/700011-011	Raspberry
ZPA12/700011-012	Sangria
ZPA13/700011-013	Admiral
ZPA14/700011-014	Juniper
ZPA15/700011-015	Regal
ZPA16/700011-016	Vapor
ZPA17/700011-017	Valley
ZPA18/700011-018	Bushel
ZPA19/700011-019	Heirloom
ZPA20/700011-020	Palomino
ZPA21/700011-021	Bamboo
ZPA22/700011-022	Saffron
ZPA23/700011-023	Tearose
ZPA24/700011-024	Canyon
ZPA25/700011-025	Bistro
ZPA26/700011-026	Toffee
ZPA27/700011-027	Rodeo
ZPA28/700011-028	Mudslide
ZPA29/700011-029	Greige
ZPA30/700011-030	Reflection
ZPA31/700011-031	Pure
ZPA32/700011-032	Desert
ZPA33/700011-033	Griffin
ZPA34/700011-034	Urbane
ZPA35/700011-035	Woodrose

- Maharam textiles are on assigned lead times. A
- Fabric numbers are listed as Herman Miller fabric number/Maharam fabric number.

For more information about our products and services or to see a list of dealers, please visit us at HermanMiller.com or call (800) 851 1196.

© 2024 Herman Miller, Inc., Zeeland, Michigan

Distribution Rights

Working together since 1956, Herman Miller and Vitra are the authentic sources of designs by Charles and Ray Eames, Alexander Girard, and George Nelson. All the designs shown in this book are protected by law. Herman Miller has obtained all rights to make and sell these designs. Also, Herman Miller holds exclusive worldwide manufacturing and distribution rights for these products with the following exceptions:

Charles and Ray Eames, George Nelson, and Alexander Girard—Worldwide distribution rights for furniture in all areas except Europe and the Middle East. For those areas, please contact Vitra.

Isamu Noguchi—Worldwide distribution rights for the Noguchi Rudder Table. Distribution rights for the Noguchi Table in North America and Central America only. For all other areas, please contact Vitra.

Magis—Exclusive distribution rights in the US and Canada. For all other areas, please contact Magis.

® HermanMiller, ☻, 3D Intelligent, 8Z Pellicle, AO, Action Office, Aeron, Aside, Bubble Lamps, Canvas Office Landscape, Caper, Celle, Cosm, Co/Struc, Daisyone, Distil, Eames, Eco-Dematerialized, Embody, Envelop, Ethospace, Exclave, Fine-Tune, FlexFront, Flo, Formcoat, Formwork, Ground Cloth, Intent, Kinemat, Layout Studio, Lino, Live Unframed, Living Office, Maharam, Meridian, Mirra, Motia, Nelson, Pari, Pellicle, Perspectives, Plex, PostureFit, PostureFit SL, Public Office Landscape, Sayl, Setu, Striad, Tu, Ubi, Verus, Wishbone, Y-Tower and Zeph are among the registered trademarks of Herman Miller, Inc., and its owned subsidiaries.

™ About Face, AireWeave, Airia, Ambit, Asari Chair by HermanMiller, Backfit, Bubbletack, Burdick Group, Butterfly Back, Canvas Vista, Cellular Suspension, Commend, Compass, Connect, DOT, Duracare, Durawrap, EnhancedAccess, Everywhere, Flex-Edge, Flute, Harmonic, Headway, Herman Miller Select, Hopsak 2, Iota, Keyless Entry, Latitude, Logic Mini, Logic Power Access Solutions, Lyris, Lyris 2, Made-to-Measure Storage, Mora, Multiscrim, Nevi, OE1, OE1 Workspace Collection, Overlay, Pixelated Support, Pronta, Renew, Sense, Soft Pad, Stackable, Stackable Storage, Swoop, Thrive, Tone, TriFlex, Twist and Wireframe are among the trademarks of Herman Miller, Inc., and its owned subsidiaries.

SM Herman Miller Options is among the service marks of Herman Miller, Inc.

AAP™ is a trademark of Extron Electronics.

Alexander Girard® is a registered trademark of The Alexander Girard Estate.

Chemsurf® is a registered trademark of Wilsonart International.

Corian® is a registered trademark of E. I. du Pont de Nemours and Company Corporation.

Crypton® is a registered trademark of Crypton, Inc.

DACRON® is a registered trademark of INVISTA S.a r.l.

Danzer® is a registered trademark of Danzer Holding AG.

Decora® is a registered trademark of Leviton Manufacturing Co., Inc.

Edelman® Leather is a registered trademark of Edelman Leather, Inc.

Extron® is a registered trademark of RGB Systems, Inc.

FENIX NTM® is a registered trademark of Arpa Industriale S.p.A.

FLEXNET™ is a trademark of Milliken & Company.

Floor Saver Glide® is a registered trademark of Carpin Manufacturing, Inc.

Forest Stewardship Council® is a registered trademark of the Forest Stewardship Council A.C. (FSC). We are FSC® certified (FSC® C102895).

FSC® is a registered trademark of the Forest Stewardship Council A.C. (FSC).

Geiger® is a registered trademark, and Bumper™, Saiba™, and Ward Bennett™ are trademarks, of Geiger International.

Hang-It-All® is a registered trademark of Lucia Eames Demetrios, d.b.a. Eames Office.

Holophane® is a registered trademark of Holophane.

Ingeo™ is a trademark of Cargill Dow LLC.

iPad® and Mac mini® are registered trademarks of Apple Inc.

Leviton® is a registered trademark of Leviton Manufacturing Co., Inc.

LifeSize® is a registered trademark of LifeSize Communications, Inc.

Logitech G® is a registered trademark of Logitech International S.A.

Magis®, Bombo®, and Me Too® are registered trademarks of Magis S.p.A.

MicrobeCare™ is a trademark of Parasol Medical LLC.

Microsoft® and Natural® Keyboard are registered trademarks of Microsoft Corporation.

Noguchi® and the Noguchi table configuration (trade dress) are registered trademarks, and Rudder Table™ is a trademark, of The Isamu Noguchi Foundation and Garden Museum.

Place Textiles® is a registered trademark of Place Textiles.

Sunbrella® is a registered trademark of Glen Raven, Inc.

SuperSeat™ is a trademark of Dahti Seating, a division of ITW.

Valor™ is among the trademarks owned by Nemschoff, Inc.